5″ | 5FR

Full-range

REDCATT

Key features:

- WIDE RANGE FREQUENCY RESPONSE
- RUBBER SURROUND, CUSTOM PAPER PULP CONE
- DESIGNED FOR HI-FI, STUDIO DESK-TOP, COLUMNS OR OTHER MULTI-WAY SYSTEMS

Design notes:

5FR delivers a good balance of low-mid frequencies. Extended frequency response opens opportunity do design compact audio systems with sizable amounts of low frequencies, yet wit great clarity in mid to high frequency region. The optimized behavior of this driver in the mid-frequency region allows the audio engineers design simplified passive crossovers or DSP without the needs for large equalizations.

The magnetic structure was designed around large high-grade ferrite magnet. All steel parts are extensively coated to cope with the most demanding environments.

The cone paper pulp and surround were fully developed by REDCATT engineers and address all major break-up modes. The speaker has improved off-axes frequency response.

The newly designed steel basket with front and rear gaskets allow this mid-woofer to be mounted from the front and rear.

Specifications:

General specs	
Nominal Diameter:	5″
Rated Impedance:	8 ohm

Power handling	
AES Power:	60 watts
Program Power:	120 watts
Peak Power:	240 watts

Voice Coil	
Diameter:	1 in.
Winding wire:	Copper
Former:	kapton
Winding height:	9 mm

T/S Parameters	
Resonant frequency:	92 Hz
Re:	5.6 ohm
Qes:	0.73
Qms:	11.4
Qts:	0.69
Vas:	3.8 liters
Sd:	90 cm2
Sensitivity:	90 dB
Mms:	8.8 grams
Bl:	6.3
Le:	0.28 mH

Design details	
Surround Material:	Rubber
Cone material:	Paper
Spider:	Nomex
Plate thickness:	5 mm
Peak to peak linear cone displacement	9.6 mm
Overall diameter:	130.5 mm
Bolt circle diameter:	139 mm
Baffle cutout dia.:	113.5 mm
Number of mounting holes:	4
Depth (flange to rear):	61 mm
Net weight:	0.99kg

Ordering codes:

5FR-X8 ohm-465A

Recone kits:

RC5FRX-465A

In many cases REDCATT produces 4 ohms, 8 ohms and 16 ohms versions. Indicate what impedance do you need in your request.

Frequency response & Impedance

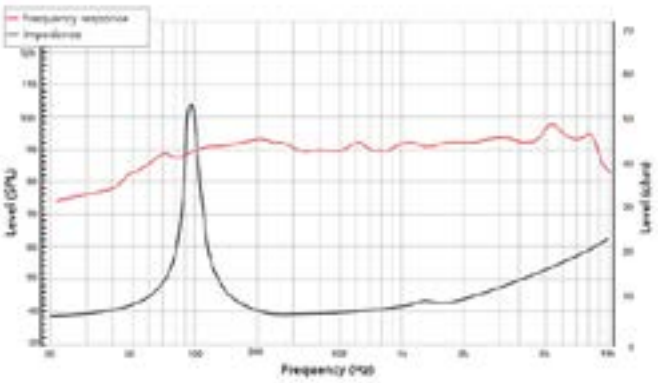

Frequency response measured on IAC baffle

2D drawing

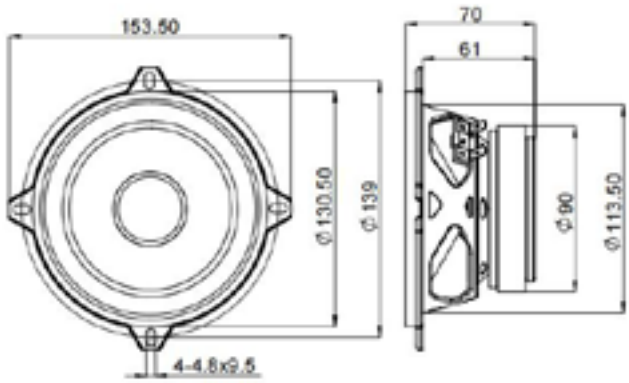

info@redcatt.net www.redcatt.net