TC9FD18-08

FULLRANGE

- Ferrite Magnet
- Copper Cap
- Patented PentaCut Cone Technology
- NBR Rubber Surround
- Aluminum Diaphragm

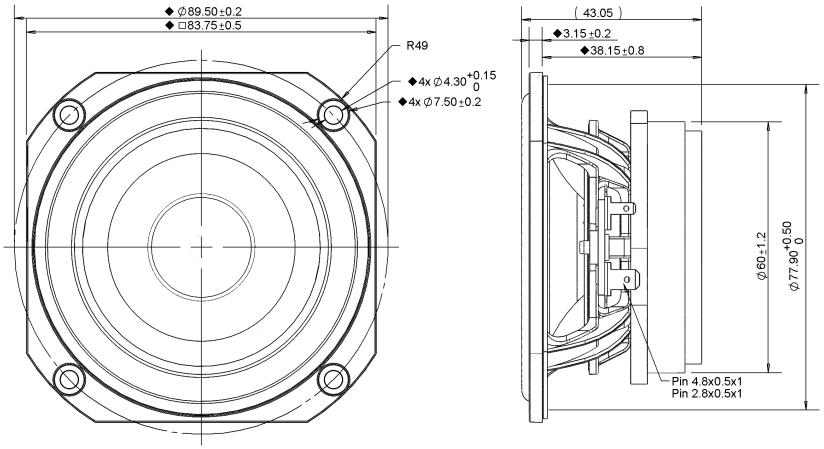

SPECIFICATIONS			
Transducer Size		3.5	in
Impedance		8	Ω
Frequency Range [1]		70 - 20000	Hz
Sensitivity [2] (2.83V | 1W @ 1m)		84 | 84	dB
Power Rating (IEC 268-5)		30	W
Voice Coil Size		19.4	mm
Air Gap | Winding Height	H_{ag} | H_{vc}	4 | 9.1	mm
Net Weight		0.3	kg
PARAMETERS [3]			
Eff. Piston Area	S_d	36.3	cm^2
DC Resistance	R_e	6.2	Ω
Minimum Impedance	Z_{min}	7	Ω
Inductance	L_e	0.108	mH
Resonance Frequency [4]	F_s	130	Hz
Mechanical Q Factor	Q_{ms}	2.97	-
Electrical Q Factor	Q_{es}	1.44	-
Total Q Factor	Q_{ts}	0.97	-
Moving Mass	M_{ms}	2.67	g
Compliance	C_{ms}	520	µm/N
Equivalent Volume	V_{as}	0.978	L
Motor Force Factor	Bl	3.13	Tm
Motor Efficiency	β	1.57	$(Bl)^2 / R_e$
Linear Excursion [5]	X_{max}	3.88	mm
Max Mechanical Excursion [6]	X_{mech}	6.85	mm

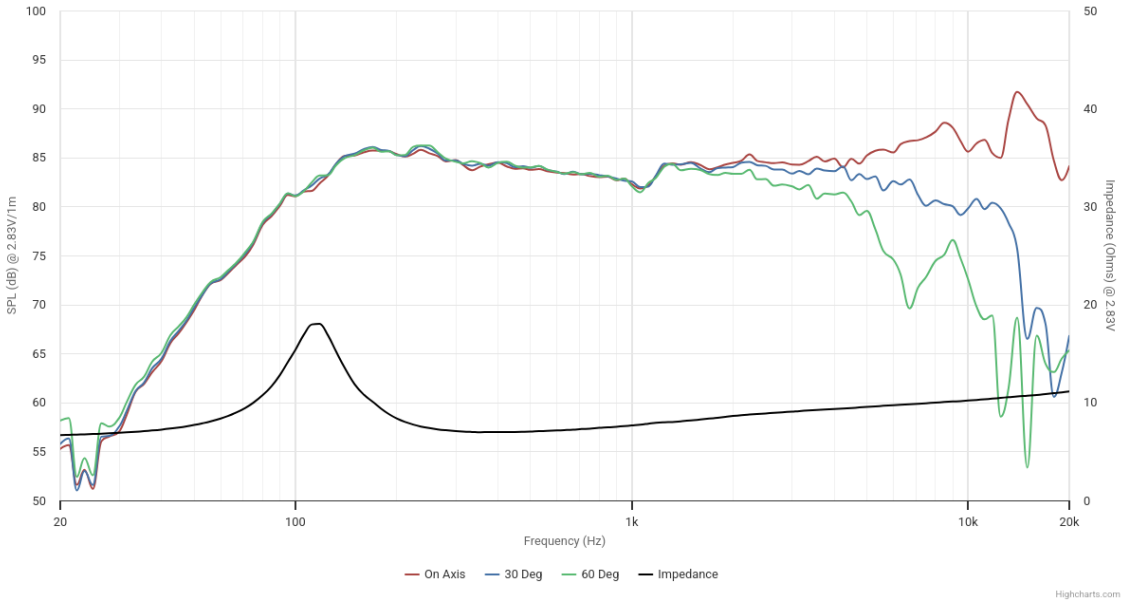

Details on this spec sheet are for reference only and should not be used for setting production limits. Specifications and product cosmetics are subject to change without notice. Peerless is a registered trademark of Tymphany Enterprises. All measurements conducted in test lab at 25°C ±10°C, 50%RH ±10%. [1] Specified by Engineering as linear working range of transducer. [2] Measured at 2.83V at 1m and normalized to 1W with respect to nominal impedance. [3] Measured in Free Air without preconditioning, therefore subject to some deviation. [4] Impedance and Fs value measured under different conditions. [5] Equal/Overhung: $(H_{vc} - H_{ag})/2 + H_{ag}/3$. Underhung: $(H_{ag} - H_{vc})/2 + H_{vc}/3$. [6] Mechanically limited excursion (e.g. bottoming, spider crash).

© Tymphany Enterprises