PROFESSIONAL LOUDSPEAKERS

6PR122

6" - 120 W - 97 dB - 8 Ohm

NOMINAL SPECIFICATIONS

Nominal Diameter	160 mm (6 in)
Overall Diameter	186.5/162 mm (7.34/6.37 in)
Bolt Circle Diameter	172 mm (6.77 in)
Baffle Cutout Diameter	147 mm (5.79 in)
Depth	78 mm (3.07 in)
Flange and Gasket Thickness	9.5 mm (0.37 in)
Net Weight	**1.3 kg (2.8 lb)**
Shipping Box (Single Carton Box)	190 x 185 x 103 mm (7.5 x 7.3 x 4.1 in)
Shipping Weight	1.5 kg (3.2 lb)

PART NUMBER

Faston Terminals - 8 Ohm Version	01604160

NOTES:

(1) 2 Hours Test According to AES 2-1984 Rev. 2003
(2) Maximum power is defined as 3dB greater than nominal power.
(3) Treated Polycotton
(4) Xmax= [(winding depth - magnetic gap depth)/2] + (magnetic gap depth/3)
(5) Maximum excursion before permanent damage

TECHNICAL PARAMETERS

Nominal Impedance	8 Ohm
Minimum Impedance	6.8 Ohm
AES Power Handling **(1)**	120 W
Maximum Power Handling (2)	**240 W**
Sensitivity (1W/1m)	**97 dB**
Frequency Range	125÷10000 Hz
Voice Coil Diameter	**37 mm (1.46 in)**
Winding Material	Al
Former Material	Kapton
Winding Depth	7.5 mm (0.30 in)
Magnetic Gap Depth	**6 mm (0.24 in)**
Flux Density	1.6 T
Magnet	Neodymium Ring
Basket Material	Aluminum
Demodulation	Aluminum Ring
Cone Surround **(3)**	Half Roll
NET Air Volume filled by Loudspeaker	0.38 dm^3 (0.013 ft^3)
Spider Profile	1x constant height waves

THIELE & SMALL PARAMETERS

Fs	110 Hz
Re	6 Ohm
Qes	0.44
Qms	3.3
Qts	0.39
Vas	4.7 dm^3 (0.17 ft^3)
Sd	137.3 cm^2 (21.28 in^2)
Xmax **(4)**	2.75 mm
Xdamage **(5)**	11.6 mm
Mms	11.7 g
Bl	10.5 N/A
Le	0.15 mH
Mmd	9.9 g
Cms	0.18 mm/N
Rms	2.4 kg/s
Eta Zero	1.38 %
EBP	250 Hz

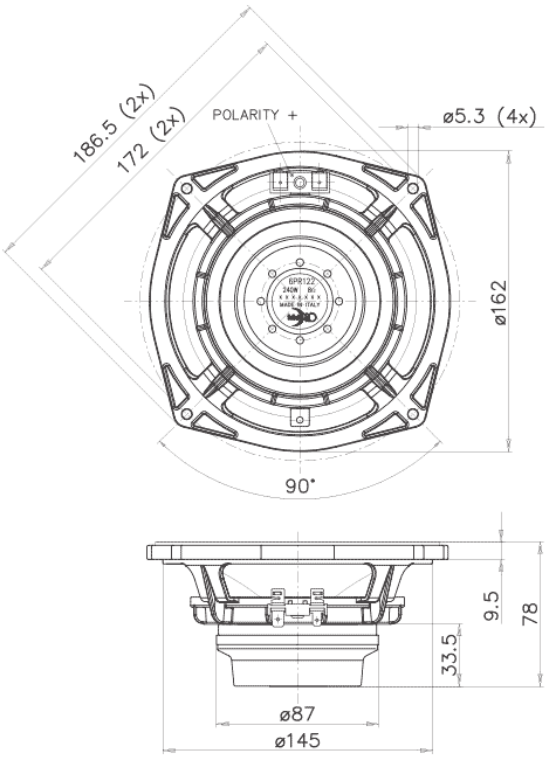

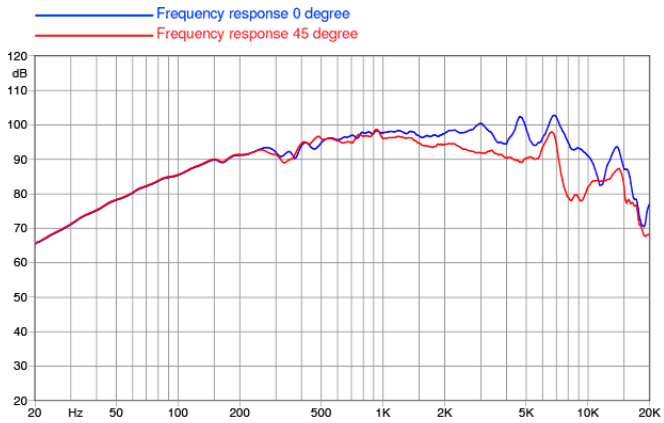

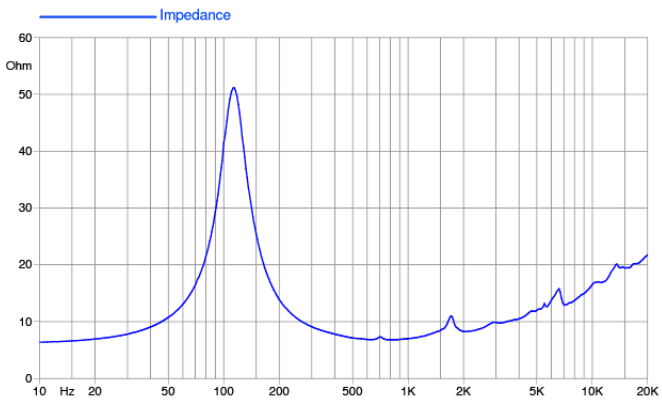

©Copyright 2025 **Faital S.p.A.** • All rights reserved.