ICEpower a/s, Vandtårnsvej 62A 3B, DK-2860 Søborg
Phone [45] 31 71 00 01, CVR-no. 25053591
info@icepower.dk, www.icepower.dk

ICEpower700AS2

Two Channel 700W ICEpower Amplifiers with Integrated Power Supply
Version 2.1

Contents

CONTENTS 2

GENERAL DESCRIPTION 4

MODULE OVERVIEW & COMPARATIVE TABLE 5

RELEASE NOTES 6

FIRST TIME USE 7

BLOCK DIAGRAM 7

CONNECTORS 8

- Connectors Overview 8
- P100: Mains Connector 8
- P103: Auxiliary Supply Connector 9
- P104: Signal Connector Specifications 9
- P105: Trigger / LED Connector Specifications 10
- P106: Signal Sense Connector Specifications 10
- P107: Speaker Connector #1 10
- P108: Hanger Vd Connector 10
- P109: Speaker Connector #2 10

ABSOLUTE MAXIMUM RATINGS 11

- Mains Input Section 11
- Auxiliary Supplies 11
- Input Section 11
- Output Section 11

ENVIRONMENTAL SPECIFICATIONS 12

- Environmental Tests 12
- Mechanical Tests 12

POWER SPECIFICATIONS 13

AUDIO SPECIFICATIONS 14

- Asymmetrical Loading 15

ELECTRICAL SPECIFICATIONS 15

- General 15
- ±15 V Auxiliary Converter 15
- 5.1 V Standby Converter 16
- Trigger/LED Section 16

MECHANICAL SPECIFICATIONS 17

TYPICAL PERFORMANCE CHARACTERISTICS 18

- Frequency Response 18
- Cross Talk 20

OUTPUT IMPEDANCE 21

DAMPING FACTOR 21

POWER EFFICIENCY 22

DISSIPATED POWER 22

INPUT/OUTPUT SCHEMATICS AND FEATURES 23

- Input Stages 23

Output Stages 23
Over Current Monitor Pin 23
Thermal Shutdown Pin 24
Temperature Monitor Pin 24
Amplifier Enable 24
Auxiliary Power Supply 25
Hanger Vd 25
Trigger and Signal Sense 25
LED Programming 26

OPERATIONAL TIMING DIAGRAMS 27

Power up with logic triggers 27
Power down with logic triggers 28
Timing with Signal Sense 29

PROTECTION FEATURES 29

Power Supply Protection 29
Amplifier Protection 29
Standby Converter 30

INTEGRATION GUIDELINE 31

Typical Setup – Wiring diagram 31
Grounding Scheme 33
EMC management 34
Thermal Design 36

MECHANICAL MOUNTING 37

Mounting on bottom side spacers 37
Mounting by top side Heat Sinks 37

STANDARDS 39

Safety 39
EMC 39

ESD WARNING 40

PACKAGING AND STORING 40

Storage Humidity and Temperature 40
Stacking 40

CONTACT 41

LEGAL NOTES 41

General Description

ICEpower700AS2 is a fully integrated, compact and efficient two-channel audio power conversion solution.

ICEpower700AS2 is designed for highly competitive consumer and professional audio products, e.g. A/V amplifiers, active speakers and multi way systems. ICEpower700AS2 is EMC and safety pre-approved. ICEpower700AS2 enables fast design-in and minimum time to market.

Features
Suitable for CE and FCC approved designs; EMC and safety pre-approved
Fully integrated two channel amplifier and power supply with mains-converter and auxiliary-converter
ICEpower amplifier hanger support for easy addition of amplifier channels (with 300A1)
Designed for flexible mounting and, if needed, easy mechanical interface to external heat sinking for even higher continuous power capability
Patent pending Conductor topology for excellent audio performance
Thermal and over-current protection
Standby converter with low standby power consumption
Universal mains
Wake-on-signal, logic triggers and programmable LED drivers

Key Specifications

- 2 channel 700 W @ 1 % THD+N, 20 Hz – 20 kHz, 4 Ω
- 120 dB(A) dynamic range
- THD+N = 0.003 % @ 1 W (4 Ω, 1 kHz)
- THD+N = 0.0008 % @ 50 W (4 Ω, 100 Hz)
- Maximum output voltage / current 77.5 Vp / 30 Ap
- High output current limit of 30 Ap
- Low output impedance of 8mΩ
- 86,5 % total efficiency @ 2 x 350 W, 8 Ω
- ±15V / 0.5A regulated AUX power supply
- Universal mains operation (100-240 V, 50-60 Hz)
- Standby converter with 5.1 V, 1 A output
- Standby power consumption 0.15 W @ 230 V
- Standby payload 0.25 W
- ErP (1275/2008/EC) compliant
- Energy Star® v3.0 compliant
- Dimensions (w × d × h) = 275 × 100 × 46 mm
8.66 × 3.94 × 1.81 in
- Weight 975 g / 34.4 oz

Module Overview & Comparative Table

Unless other specified, all comparison table values represent typical characteristics.

Amplifier Section	**Power (PSU & amp) & PSU Section**
1x750 W or 2x550 W, 1 % THD+N, 1 kHz / 4 Ω	Continuous combined output power: 1x400 W or 2x200 W 4 Ω & 8 Ω, T_a = 25 °C, 230 V_{AC}
1x370 W or 2x370 W, 1 % THD+N, 1 kHz / 8 Ω	Time of max rated output power: >300 s (230 V_{AC}) output 1x700 W / 4 Ω or 2x350 W / 8 Ω, T_a = 25 °C
Max output voltage 77.5 V_p, max output current 30 A_p	Max operating ambient temperature 50 °C
Min load impedance min 2.5 Ω	Maximum total module efficiency 86.5 %
THD+N 0.0012 % @ 1 kHz, 10 W / 4 Ω	**+15V**, P103 Pin 7, +15 V_{DC}, max 0.5 A (no hanger), max 470 µF (output)
THD+N 0.0039 % @ 6.67 kHz, 10 W / 4 Ω	**-15V**, P103 Pin 9, -15 V_{DC}, max 0.5 A (no hanger), max 470 µF (output)
THD+N 0.0008 % @ 1 kHz, 10 W / 8 Ω	**5V1**, P103 Pin 10, 5.1 V_{DC}, 1 A ON, 50 mA stby, max 1000 µF (output)
Input sensitivity 2.31 V_{RMS}, 3.3 V_p (input voltage req. to reach rated power / clip level)	**GNDB**, P103 Pin 2, 5 & 8
Voltage amplifier gain 27.5 dB or 23.7x	**Vd**, P108 Pin 1, +43 V_{DC}, for hanger (output)
Output idle noise 50 µV A-weighted, 80 µV unweighted	**GNDA**, P108 Pin 2, for hanger
Bandwidth (-3 dB) upper 70 kHz, lower 1.5 Hz / 4 Ω	
Dynamic range 120 dB A-weighted	
Conductor amplifier technology	**+12V**, P103 Pin 1 & 4, for up to two ICEpower hangers (output)
	-12V, P103 Pin 3 & 6, for up to two ICEpower hangers (output)
Both amplifier channels are configured in BTL mode. The BTL outputs cannot be further bridged into a single channel.	Universal mains input voltage range 100 - 240 V_{AC}

To power up the auxiliary rails and main converter please connect P103 Pin 10 & 12	Module dimensions: L 100 mm / W 275 mm / H 46 mm
	Compatibility (Amplifier Hanger) 300A1
	Protection features: Short circuit, thermal, over-current, DC, over- and undervoltage
	Control interface: Signal Sense, 3-5V_trigger, 12V_trigger, LED_PROG_STANDBY, LED_PROG_ON, Amplifier Enable **Readouts**: Thermal monitor, Thermal shutdown, OC, STANDBY_LED, ON_LED, Amplifier Enable
	ErP (1275/2008/EC) compliant Energy Star® v3.0 compliant
For ordering: ICEpower700AS2, part number 8008140	Certified by cURus
Cable kit available please contact sales@icepower.dk	EMC and safety pre-approved

Release Notes

Data Sheet Version	Date	Revised by	Description
1.0	2016-02-18	KLK	Release version
1.1	2017-06-01	TOC/DIT	Address updated Legal Notes updated
1.2	2017-07-27	LPP	+/- 15V range updated DC protect added Safety updated EMC updated
1.3	2017-09-26	DIT/LBH	Note added to table 10 Minor design changes
1.4	2018-06-19	LBH/DIT	Output voltage / current spec. added
1.5	2018-11-06	LBH/DIT	Absolute Maximum Ratings updated
1.6	2020-01-14	LBH	Mains power consumption added
1.7	2020-02-10	LBH	8 Ω output power specs added
1.8	2020-05-13	LBH/NKK	Safety standards updated
1.9	2023-06-07	LKA	Removed references to UL/IEC60065
2.0	2026-01-23	RSM/PBM	New amplifier topology released PCB version G
2.1	2026-02-26	LBH/PEJ	Module overview & comparative table added

First Time Use

The 700AS2 power supply will power up in standby if no external activation signal is present. For easy activation, it is possible to use the internal 5V standby voltage as the activation signal. That can be done by connecting P103p10 and P103p12 using a switch.

That connects the 5V standby voltage to the 3-5V trigger input of the system. Once connected the system will power up and play any signal present on the audio signal input connector. The +/-15V auxiliary voltages will also become active.

Block Diagram

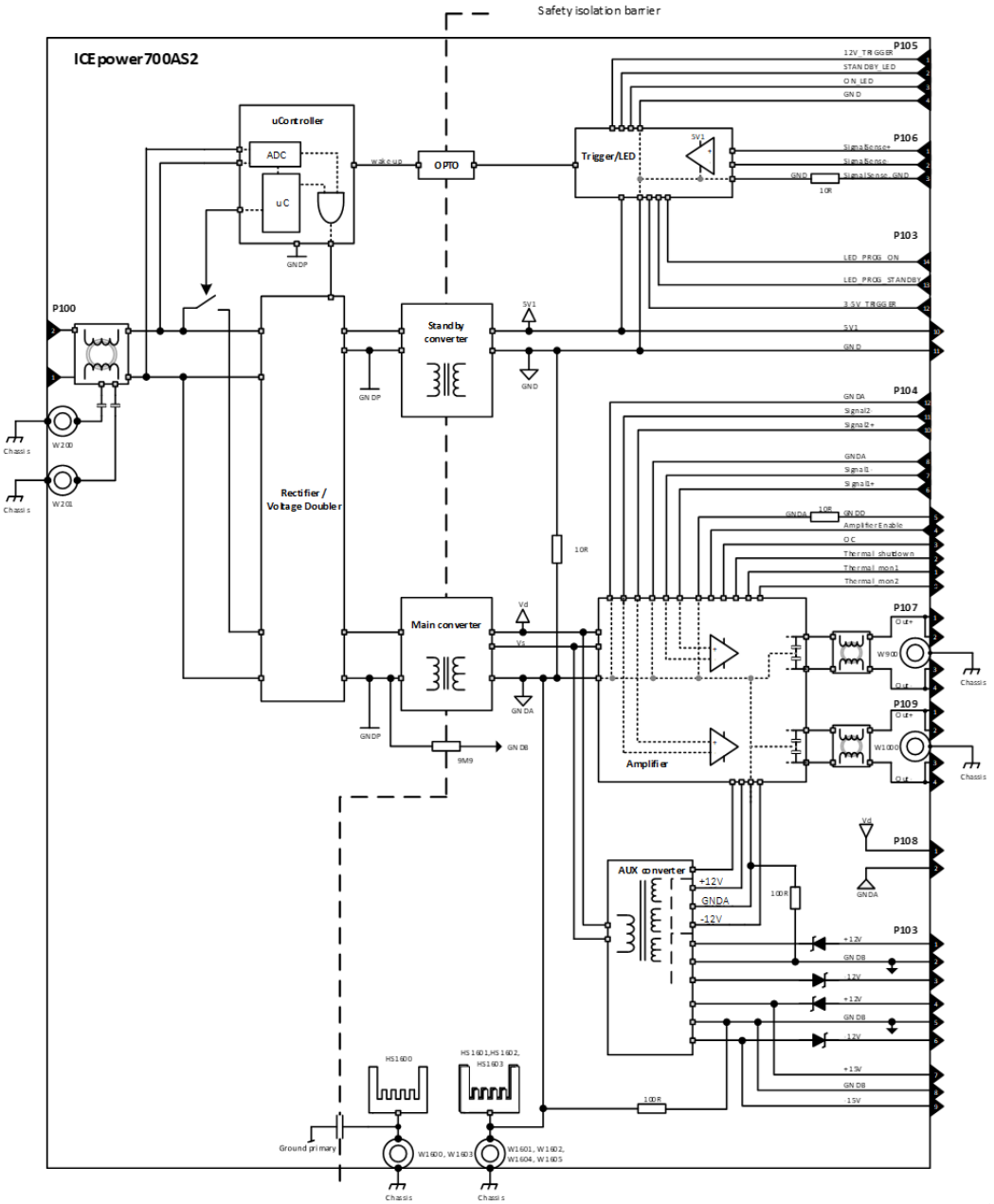

Figure 1: ICEpower700AS2 block diagram

Connectors

The ICEpower700AS2 module comes with industry standard connectors selected for long-term reliability.

Connectors Overview

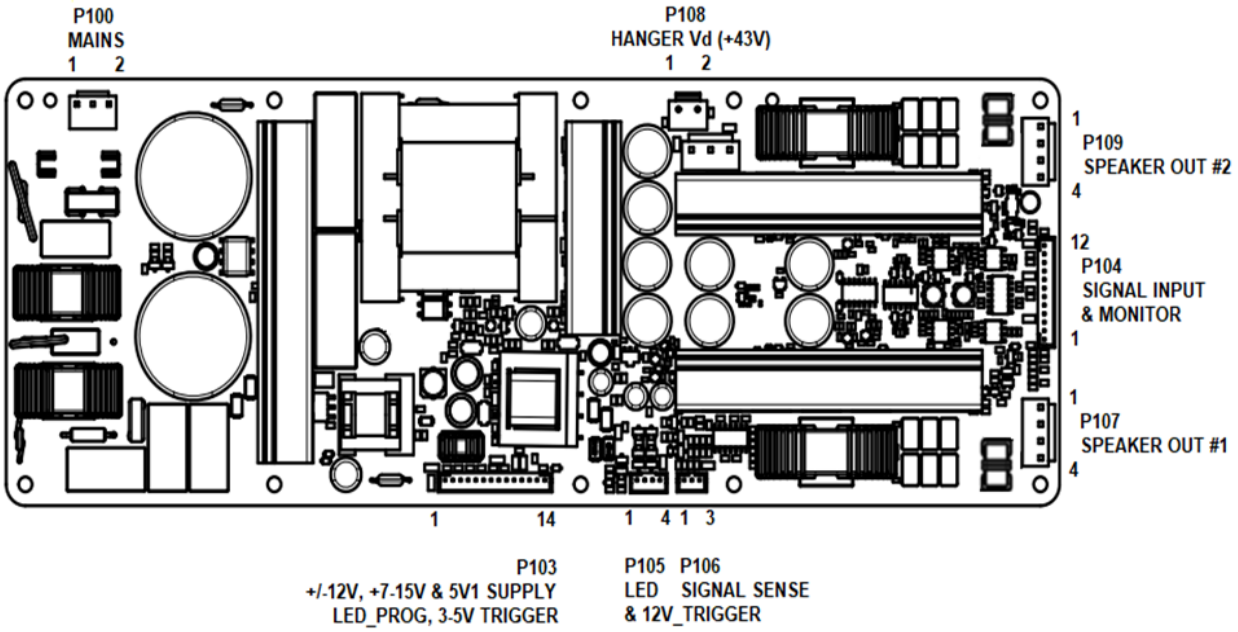

Figure 2: ICEpower700AS2 connector overview

P100: Mains Connector

Type: JST B2P3-VH(LF)(SN)			
PIN	**Function**	**Description**	**Type**
1	Neutral	Neutral AC	Input
2	Live	Live AC	Input

Table 1: Mains connector

P103: Auxiliary Supply Connector

Type: JST B14B-PH-K-S(LF)(SN)			
PIN	**Function**	**Description**	**Type**
1	+12V	For one ICEpower300A1 hanger only! Positive supply	Output
2	GNDB	For one ICEpower300A1 hanger only! Ground terminal	GND
3	-12V	For one ICEpower300A1 hanger only! Negative supply	Output
4	+12V	For one ICEpower300A1 hanger only! Positive supply	Output
5	GNDB	For one ICEpower300A1 hanger only! Ground terminal	GND
6	-12V	For one ICEpower300A1 hanger only! Negative supply	Output
7	+15V	Positive regulated auxiliary supply	Output
8	GNDB	Ground terminal for the auxiliary supply section.	GND
9	-15V	Negative regulated auxiliary supply	Output
10	5V1	Regulated standby converter supply	Output
11	GND	Ground terminal for the standby converter and control section	GND
12	3-5V_trigger	Logic trigger for controlling On/Standby mode	Input
13	LED_PROG_STANDBY	Programming pin for STANDBY LED driver	Input
14	LED_PROG_ON	Programming pin for ON LED driver	Input

Table 2: Auxiliary Supply connector

P104: Signal Connector Specifications

Type: JST B12B-PH-K-S(LF)(SN)			
PIN	**Function**	**Description**	**Type**
1	Thermal monitor 1	Amplifier temperature monitoring	Output
2	Thermal shutdown	Amplifier thermal shutdown monitor	Output
3	OC	Amplifier over current monitor	Output
4	Amplifier Enable	Amplifier enable	Input / Output
5	GNDD	Ground terminal for the Amplifier Enable and monitor section.	GND
6	Signal1+	Positive audio signal input	Input
7	Signal1-	Negative audio signal input	Input
8	GNDA	Ground terminal for the signal section.	GND
9	Thermal monitor 2	Amplifier temperature monitoring	Output
10	Signal2+	Positive audio signal input	Input
11	Signal2-	Negative audio signal input	Input
12	GNDA	Ground terminal for the signal section.	GND

Table 3: Signal connector specifications

P105: Trigger / LED Connector Specifications

Type: JST B4B-PH-K-S(LF)(SN)			
PIN	**Function**	**Description**	**Type**
1	12V_trigger	Logic trigger for controlling On/Standby mode	Input
2	STANDBY_LED	STANDBY LED driver output	Output
3	ON_LED	ON LED driver output	Output
4	GND	Ground terminal for the standby converter and control section	GND

Table 4: Trigger/LED connector

P106: Signal Sense Connector Specifications

Type: JST B3B-PH-K-S(LF)(SN)			
PIN	**Function**	**Description**	**Type**
1	Signal Sense+	Positive audio input for wake-on-signal	Input
2	Signal Sense-	Negative audio input for wake-on-signal	Input
3	Signal Sense, GND	Ground for the Signal Sense section	GND

Table 5: Signal Sense connector

P107: Speaker Connector #1

Type: JST B4P-VH(LF)(SN)			
PIN	**Function**	**Description**	**Type**
1	Vo 1+	Amplifier positive output	Output
2	Vo 1+	Amplifier positive output	Output
3	Vo 1-	Amplifier negative output	Output
4	Vo 1-	Amplifier negative output	Output

Table 6: Speaker connector

P108: Hanger Vd Connector

Type: JST B02P-NV(LF)(SN)			
PIN	**Function**	**Description**	**Type**
1	Vd, +43 V	For ICEpower hanger only! DC positive supply	Output
2	GNDA	For ICEpower hanger only! DC ground	Output

Table 7: Hanger connector

P109: Speaker Connector #2

Type: JST B4P-VH(LF)(SN)			
PIN	**Function**	**Description**	**Type**
1	Vo 2+	Amplifier positive output	Output
2	Vo 2+	Amplifier positive output	Output
3	Vo 2-	Amplifier negative output	Output
4	Vo 2-	Amplifier negative output	Output

Table 8: Speaker connector

Absolute Maximum Ratings

Absolute maximum ratings indicate limits beyond which damage may occur.

Mains Input Section

700AS2 with Universal Mains

Pin	Parameter	Value	Units
P100: 1, 2	Maximum mains voltage (safety test)	264[1]	V_{AC}
P100: 1, 2	Minimum mains voltage (safety test)	85[1]	V_{AC}
P100: 1, 2	Maximum mains frequency	65	Hz
P100: 1, 2	Minimum mains frequency	45	Hz

Table 9: Absolute maximum ratings, mains input section

[1]The maximum operating/usage mains voltage is 240Vac and the minimum operating/usage mains voltage is 100Vac.

Auxiliary Supplies

Pin	Parameter	Value	Unit
P103: 7, 8, 9	Maximum current draw from +/-15 V No hanger connected One ICEpower300A1 hanger connected Two ICEpower300A1 hangers connected	 500 415 330	mA
P103: 7, 8 P103: 9, 8	Maximum external capacitance +/-15 V	470	uF
P103: 10, 11	Maximum current draw from 5V1 in Standby mode[2]	50	mA
P103: 10, 11	Maximum current draw from 5V1 in Operational mode	1.0	A
P103: 10, 11	Maximum external capacitance 5V1	1000	uF

Table 10: Absolute maximum ratings, auxiliary supply

[2]The 5V1 can deliver 1A in standby mode, but to ensure standby power consumption below 0.5W, the maximum current draw from 5V1 is set to 50mA.

Input Section

Connector: Pin	Parameter	Value	Unit
P104: 6, 8 | 7, 8 P104: 10, 12 | 11, 12	Maximum voltage range on audio input pin	±12	V_p
P103: 12, 11	Maximum 3 V - 5 V trigger voltage	37	V
P103: 13, 14, 11	Maximum LED programming voltage	5.3	V
P105: 1, 4	Maximum 12 V trigger voltage	45	V
P106: 1, 3	Maximum current on Signal Sense (clamping at ±2.5 V, otherwise Zin > 1 MΩ)	10	mA
P106: 2, 3	Maximum current on Signal Sense (clamping at ±2.5 V, otherwise Zin = 47 kΩ)	10	mA

Table 11: Absolute maximum ratings, input section

Output Section

Connector: Pin	Parameter	Value	Units
P107: (1+2), (3+4) P109: (1+2), (3+4)	Minimum amplifier load resistance	2.5	Ω
	Maximum current draw from amplifier output	30	Ap
	Maximum amplifier pure capacitive load	220	nF

Table 12: Absolute maximum ratings, output section

Environmental Specifications

Parameter	Conditions	Min	Typ	Max	Units
Ambient temperature, operating	Natural convection cooling	0		50	°C
Ambient temperature, storage		-40		70	°C
Ambient temperature, shelf		0		60	°C
Relative humidity	Non-condensing			85	%
Altitude, operating				2000	m
Vibration level 700AS2	Measured on relays, all directions			4	g

Table 13. Environment specifications

Environmental Tests

During development, the ICEpower700AS2 has sustained tough extensive environmental testing to ensure the module robustness. These tests include e.g. thermal shock and cycling, humid condensing and non-condensing conditions and prohesion.

Mechanical Tests

A wide range of mechanical tests has been performed on ICEpower700AS2 to ensure high reliability.

Test	Acceleration	Amount
Unpowered tests: The unit is powered after the test to verify functionality.		
Random vibration	2,1 g_{rms}, random profile composed of 5 frequencies in the range 5 Hz to 275 Hz	3 perpendicular directions[1] 3 x 20 min. + 3 x 10 min. + 3 x 10 min.
Bump	10 g, 16 ms pulse, half sinusoidal	1000 bumps in 6 directions 2-4 bumps per second
Shock	40 g / 26 ms to 70 g / 12 ms in steps of 10 g	6 directions, 3 shocks per direction

Table 14: Mechanical tests

Additionally, the ICEpower700AS2 has also undergone Highly Accelerated Life Test (HALT) in order to optimize ruggedness and ensure high reliability. During HALT the modules were powered up and exposed to temperatures in the range of [-60; 90] °C as well as random vibrations at levels up to 60 g.

A poorly constructed end product with mechanical resonances can be fatal to any module, no matter its ruggedness. Therefore, ICEpower recommend that the end product is vibration tested, in order to identify local resonances. Vibration testing can be performed e.g. using a speaker sinus sweep, while using accelerometers for monitoring the module mounting base and locally on the module.
Please refer to the maximum recommended vibration level on the ICEpower700AS2 relays, stated in Environmental Specifications on page 12.

[1] 6 directions: (up, down, left, right, forward and backward). 3 directions: (up and down, left and right, forward and backward).

Power Specifications

Unless otherwise specified. T_a = 25 °C, f = 1 kHz, R_L = 4 Ω, 230 V mains

Parameter	Conditions	Min	Typ	Max	Units
Nominal DC voltage	Mains input within range		+43.5		V
Positive analog/digital supply	Mains input within range	+4.9	+5.1	+5.3	V
Positive analog supply	Mains input within range	+14.0	+15.0	+16.5	V
Negative analog supply	Mains input within range	-16.5	-15.0	-14.0	V
Time of maximum rated output power, 1ch 8R	350 W out. No preheating.		>1800		s
Time of maximum rated output power, 2ch 8R	2x 350 W out. No preheating.		>300		s
Time of maximum rated output power, 1ch 4R	700 W out. No preheating.		>300		s
Continuous output power without thermal shutdown – 1ch driven. (4 Ω)	Thermal stab. @ T_a = 25 °C.		400		W
Continuous output power without thermal shutdown – 1ch driven. (8 Ω)	Thermal stab. @ T_a = 25 °C.		400		W
Continuous output power without thermal shutdown – 2ch driven. (4 Ω)	Thermal stab. @ T_a = 25 °C.		2x 200		W
Continuous output power without thermal shutdown – 2ch driven. (8 Ω)	Thermal stab. @ T_a = 25 °C.		2x 200		W
Quiescent power consumption (amplifier disabled)	Amplifier Enable pin low		13		W
Quiescent power consumption (amplifier enabled)	Po = 0 W		19		W
Standby power consumption	I_{LED} = 0 A, I_{5V1} = 0 A, 230 VAC		0.15		W
Mains power consumption	Po = 2x44W 4Ω (AUX not incl), 240 V, 50 Hz Vd(+43 V): no current draw AUX supply I_{5V1} = 1.0A, I±15V = 0.425A		150		W
Total power efficiency	Po = 1 x 87,5 W 4 Ω Po = 2 x 43,75 W 4 Ω Po = 2 x 87,5 W 4 Ω Po = 1 x 700 W 4 Ω Po = 2 x 350W 4 Ω Po = 2 x 350W 8 Ω		70 64.5 77.5 85 83 86.5		%

Table 15: Power specifications

Audio Specifications

Unless otherwise specified, f = 1 kHz, Po = 1 W, T_a = 25 °C.

Measurements were done using an Audio Precision AES17 20 kHz 7th order measurement filter unless otherwise specified.

Parameter	Conditions	Min	Typ	Max	Units
Output power @ 1 % THD+N f = 1 kHz, 1ch driven	R_L = 4 Ω 230 V_{ac} / 50 Hz, 115 V_{ac} / 60 Hz, 100 V_{ac} / 50 Hz, 85 V_{ac} / 50 Hz		750 750 740 570		W
Output power @ 1 % THD+N f = 1 kHz, 1ch driven	R_L = 8 Ω 230 V_{ac} / 50 Hz, 115 V_{ac} / 60 Hz, 100 V_{ac} / 50 Hz, 85 V_{ac} / 50 Hz		370 370 370 370		W
Output power @ 1 % THD+N 20 Hz < f < 20 kHz, 1ch driven	R_L = 8 Ω 230 V_{ac} / 50 Hz, 115 V_{ac} / 60 Hz, 100 V_{ac} / 50 Hz, 85 V_{ac} / 50 Hz		370 370 370 365		W
Output power @ 1 % THD+N 20 Hz < f < 20 kHz, 1ch driven	R_L = 4 Ω 230 V_{ac} / 50 Hz, 115 V_{ac} / 60 Hz, 100 V_{ac} / 50 Hz, 85 V_{ac} / 50 Hz		670 650 580 510		W
Output power @ 1 % THD+N f = 1 kHz, 2ch driven, per ch	R_L = 4 Ω 230 V_{ac} / 50 Hz, 115 V_{ac} / 60 Hz, 100 V_{ac} / 50 Hz, 85 V_{ac} / 50 Hz		550 480 370 280		W
Output power @ 1 % THD+N f = 1 kHz, 2ch driven, per ch	R_L = 8 Ω 230 V_{ac} / 50 Hz, 115 V_{ac} / 60 Hz, 100 V_{ac} / 50 Hz, 85 V_{ac} / 50 Hz		370 370 370 290		W
Output power @ 1 % THD+N 20 Hz < f < 20 kHz, 2ch driven, per ch	R_L = 8 Ω 230 V_{ac} / 50 Hz, 115 V_{ac} / 60 Hz, 100 V_{ac} / 50 Hz, 85 V_{ac} / 50 Hz		335 330 295 245		W
Output power @ 1 % THD+N 20 Hz < f < 20 kHz, 2ch driven, per ch	R_L = 4 Ω 230 V_{ac} / 50 Hz, 115 V_{ac} / 60 Hz, 100 V_{ac} / 50 Hz, 85 V_{ac} / 50 Hz		400 390 340 250		W
Vo-max	Maximum output voltage		77.5		V_p
Io-max	Maximum output current		30		A_p

THD+N in 4 Ω (AES17 measurement filter)	f = 100 Hz, P_O =1 W		0.003		%
Output referenced idle noise	20 Hz < f < 20 kHz A-weighted Unweighted	 30 50	 50 80	 130 160	µV
Nominal Voltage Gain	f = 1 kHz		27.5		dB
Frequency response	f = 20 Hz – 20 kHz, R_L = 4 Ω – inf. Ω		±0.5	±0.7	dB
Upper bandwidth limit (-3 dB)	R_L = 4 Ω		70		kHz
Lower bandwidth limit (-3 dB)	R_L = All loads		1.5		Hz
Input impedance, Signal IN+ and IN-	f = 1 kHz		36		kΩ
Abs. output impedance	f = 1 kHz		8		mΩ
Load impedance range		2.5	4	∞	Ω
Dynamic range	A-weighted at 700 W @ 4 Ω		120		dB

Table 16: General audio specifications

Asymmetrical Loading

It is possible to load one channel with 4 Ω and the other channel with 8 Ω. The total available system power can then be found by multiplying the number found in the *4 Ω, 2ch driven* sections by 2.

E.g. at 230 V_{ac} / 50 Hz, the available 1 kHz power is 1100W, which can be divided between 740W@4 Ω and 360W@8 Ω.

Electrical Specifications

General

Unless otherwise specified, T_a = 25 °C.

Parameter	Conditions	Min	Typ	Max	Unit
Nominal mains voltage range		100		240	Vac
Nominal mains frequency range		50		60	Hz
Switching frequency	Idle	380	440	480	kHz
Switching frequency range (amplifier)	Idle to full scale	110		460	kHz
Switching frequency (power supply)		70	140	340	kHz
Switching frequency	Operational mode, I_{5V1} = [0; 1] A	21		143	kHz
Micro controller clock frequency	Operational mode		8		MHz

Table 17: Electrical specifications

±15 V Auxiliary Converter

Unless otherwise specified, T_a = 25 °C.

Parameter	Conditions	Min	Typ	Max	Unit
Tolerance of ±15 V		±14.0	±15.0	±16.5	V
Load regulation	0 A ≤ I±15 V ≤ 0.5 A		1.7		V
Ripple of ±15 V	$I_{\pm 15V}$ = 0.5 A		0.20		V_{pp}
Load transition regulation	$I_{\pm 15V}$ step up/down 0.2 A, 0.5 A		0.40		V_{pp}
±15 V overload protection	0 °C ≤ Ta ≤ 50 °C		1.0		A

Table 18: ±15 V Auxiliary converter electrical specifications

5.1 V Standby Converter

Unless otherwise specified, T_a = 25 °C.

Parameter	Conditions	Min	Typ	Max	Unit
Tolerance of 5V1		4.9	5.1	5.3	V
Load regulation	0 A ≤ I_{5V1} ≤ 1.0 A		50		mV
Mains regulation	I_{5V1} = 1.0 A		10		mV
Temperature variation regulation	0 °C ≤ T_a ≤ 50 °C, I_{5V1} = 1.0 A		40		mV
Ripple of 5V1	I_{5V1} = 1.0 A		50		mV_{pp}
Load transition regulation	I_{5V1} step up/down 0.2 A, 1.0 A		0.2		Vp
Output current available from 5V1 for standby power consumption ~ 0.5 W	230 VAC, no LED			50	mA
5V1 overload protection	0 °C ≤ T_a ≤ 50 °C, steady state	1.8		2.6	A

Table 19: 5.1 V Standby converter electrical specifications

Trigger/LED Section

Unless otherwise specified, T_a=25 °C.

Parameter	Conditions	Min	Typ	Max	Unit
Signal Sense - Trigger Level	Sine wave 1 kHz		1.5		mV
3-5V trigger – Trigger Level			1.3		V
3-5V trigger – Off Level			1.2		V
12V trigger – Trigger Level			2.7		V
12V trigger – Off Level			2.6		V
Minimum ON LED current	LED_PROG_ON open		270		uA
Minimum STANDBY LED current	LED_PROG_STANDBY open		270		uA
Maximum ON LED current	LED_PROG_ON shorted to 5V1		6.3		mA
Maximum STANDBY LED current	LED_PROG_STANDBY shorted to 5V1		3.8		mA
Available output voltage at maximum STANDBY LED current	LED_PROG_STANDBY shorted to 5V1	3.9	4.3		V
Available output voltage at maximum ON LED current	LED_PROG_ON shorted to 5V1	3.9	4.3		V

Table 20: Trigger/LED electrical specifications

Mechanical Specifications

The ICEpower700AS2 is designed for mounting bottom down via spacers and/or via heat sinks and spacers.
Find below the outer dimensions in [mm] of the ICEpower700AS2 module.
For drill guides, refer to the section Mechanical Mounting pages 36.

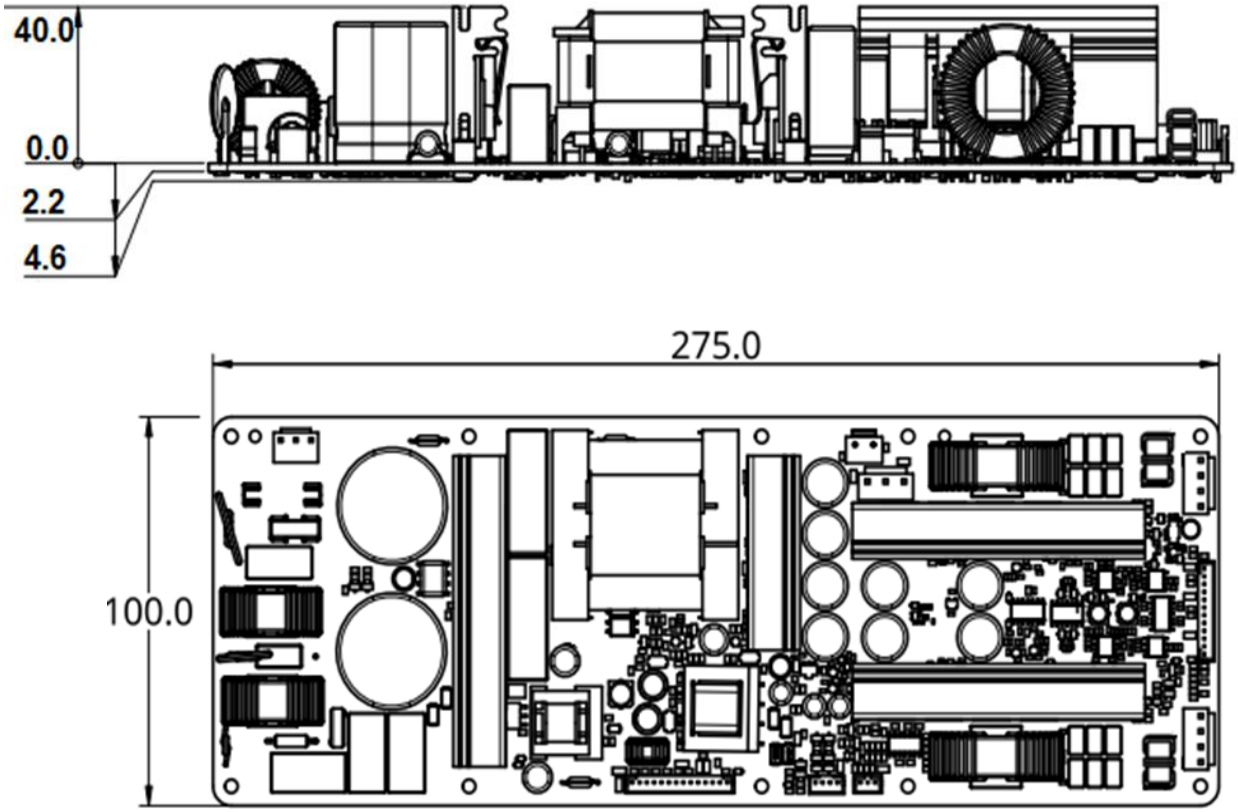

Figure 3: Outer dimensions ICEpower700AS2

A minimum clearance of 12 mm around the module is recommended for safety and ventilation reasons.

Typical Performance Characteristics

Frequency Response

Conditions: Measurement bandwidth 500 kHz, Vo=4Vrms (4Wrms@4Ω)

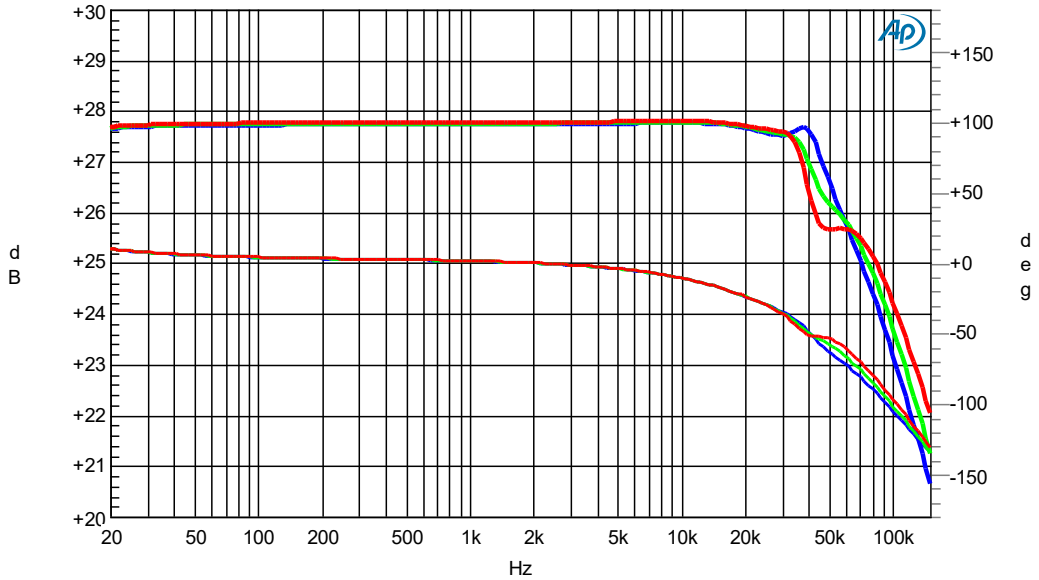

Figure 4: Frequency response in 4 Ω (blue), 8 Ω (green) and open load (red). Top – amplitude. Bottom – phase

Total Harmonic Distortion + Noise

Conditions: All channels enabled, one channel driven. Audio Precision AUX-0025 passive class-D filter and Audio Precision AES17 20 kHz 7th order measurement filter are used for measurements. The frequency 6.67 kHz corresponds to the worst-case scenario where both 2nd and 3rd harmonics are within the audio band.

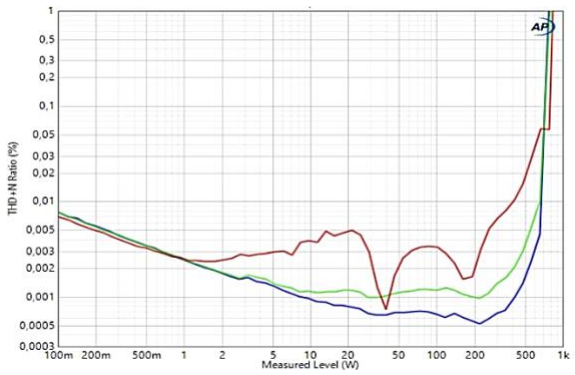

Figure 5: Ch1 THD+N vs. Po @ 100Hz(blue), 1kHz(green), 6.67kHz(red), RL=4Ω

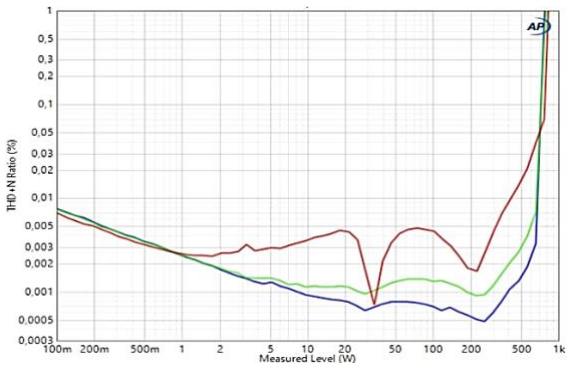

Figure 6: Ch2 THD+N vs. Po @ 100Hz(blue), 1kHz(green), 6.67kHz(red), RL=4Ω

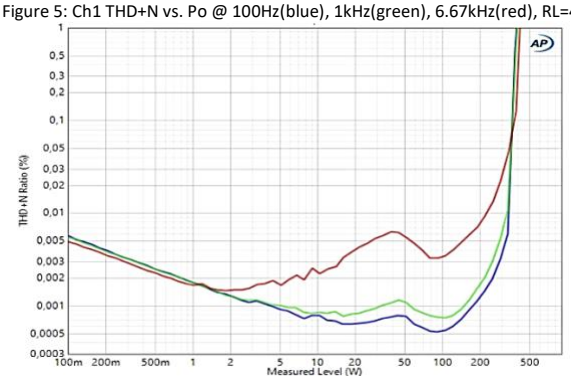

Figure 7: Ch1 THD+N vs. Po @ 100Hz(blue), 1kHz(green), 6.67kHz(red), RL=8Ω

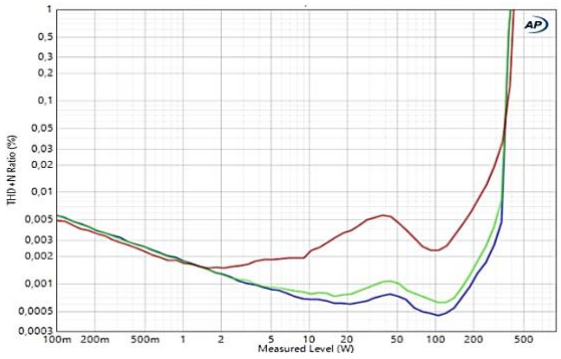

Figure 8: Ch2 THD+N vs. Po @ 100Hz(blue), 1kHz(green), 6.67kHz(red), RL=8Ω

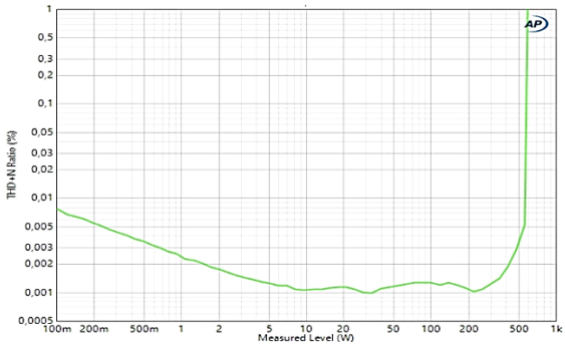

Figure 9: Ch1 THD+N vs. Po @ 1 kHz, RL = 4 Ω, Ch2 driven in phase

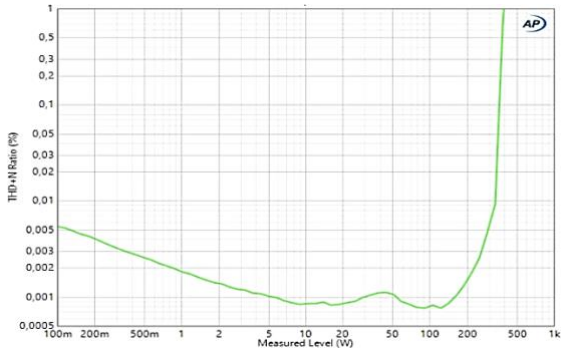

Figure 10: Ch1 THD+N vs. Po @ 1 kHz, RL=8 Ω, Ch2 driven in phase

Idle Noise and Low Power Spectrum

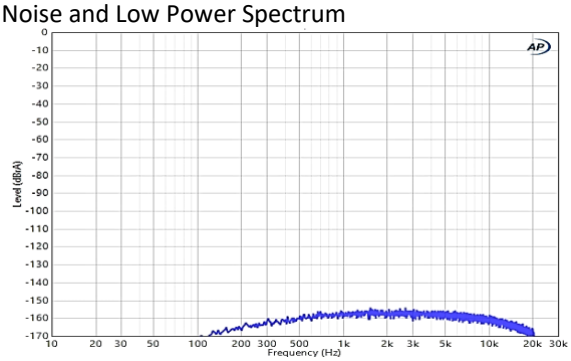

Figure 11: Idle noise (32K FFT). Residual = 50 µV(A), RL = 4 Ω (Relative to 700 W into 4 Ω)

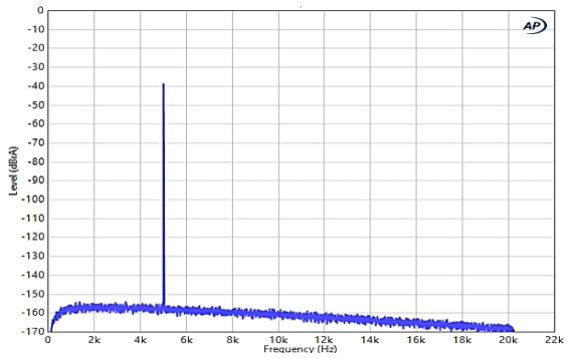

Figure 12: f = 5 kHz. Po = 100 mW, RL = 4 Ω (Relative to 700 W into 4 Ω)

Cross Talk

Conditions: Po= from 87,5 W to 700 W RL=4 Ω, wide bandwidth measurement. Audio Precision AUX-0025 passive class-D filter and Audio Precision AES17 20 kHz 7th order measurement filter are used for measurements. Both channels active/enabled during all measurements, only input signal is switched.

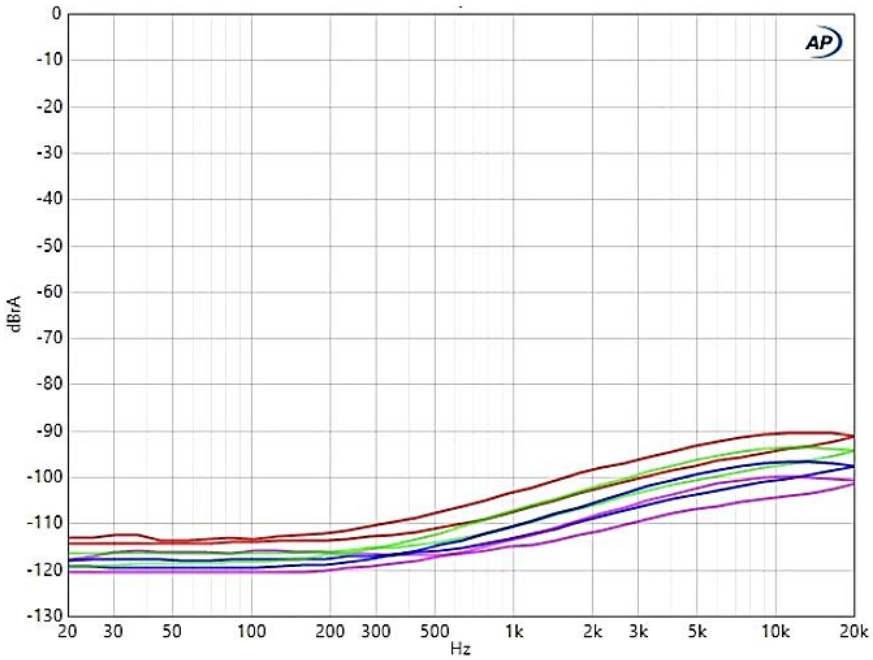

Figure 13: Cross talk, Ch1 vs Ch2 and Ch2 vs Ch1. 1/8th power(pink), 1/4th power(blue), ½ power(green) and full power(red).

Output Impedance

The output impedance is measured by feeding $1A_{RMS}$ into the output of the amplifier and measuring the voltage on the output. The voltage then corresponds to the output impedance. The output impedance is measured directly at the terminals on the PCB.

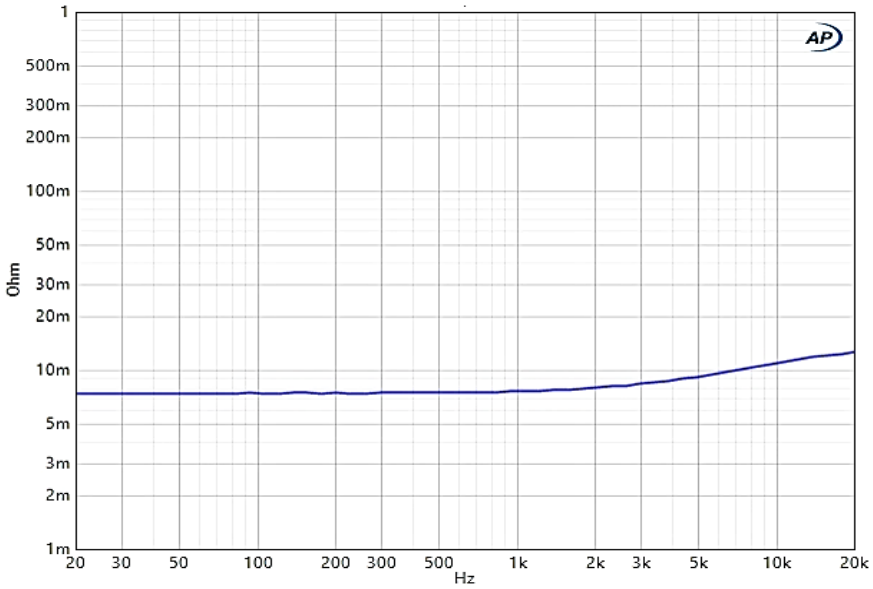

Figure 14: Output impedance at the output terminals

Damping Factor

The damping factor is calculated as the ratio between the output impedance of the amplifier and the load impedance.

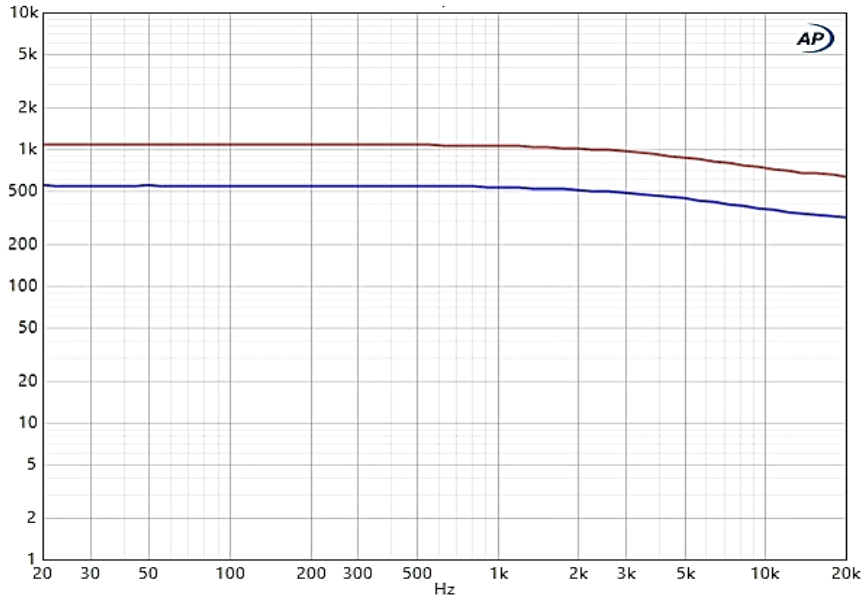

Figure 15: Damping factor vs. frequency 4 Ω (blue) and 8 Ω (red)

With its low output impedance, the ICEpower700AS2 is designed to be unaffected by loudspeaker loading characteristics. However, care should be taken with purely capacitive loads.

Power Efficiency

The total power efficiency from AC mains to amplifier output.

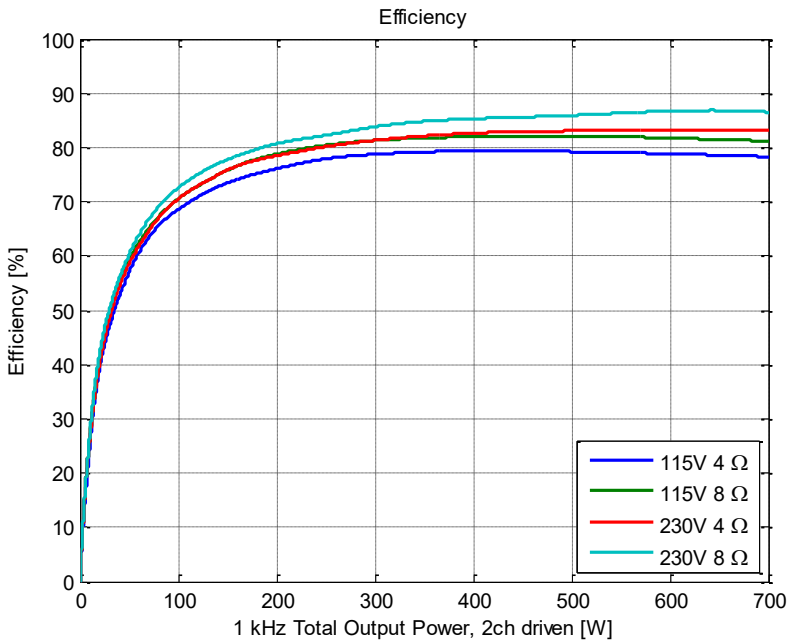

Figure 16: Efficiency vs. output power

Dissipated Power

The total dissipated power within the module from AC mains to amplifier output.

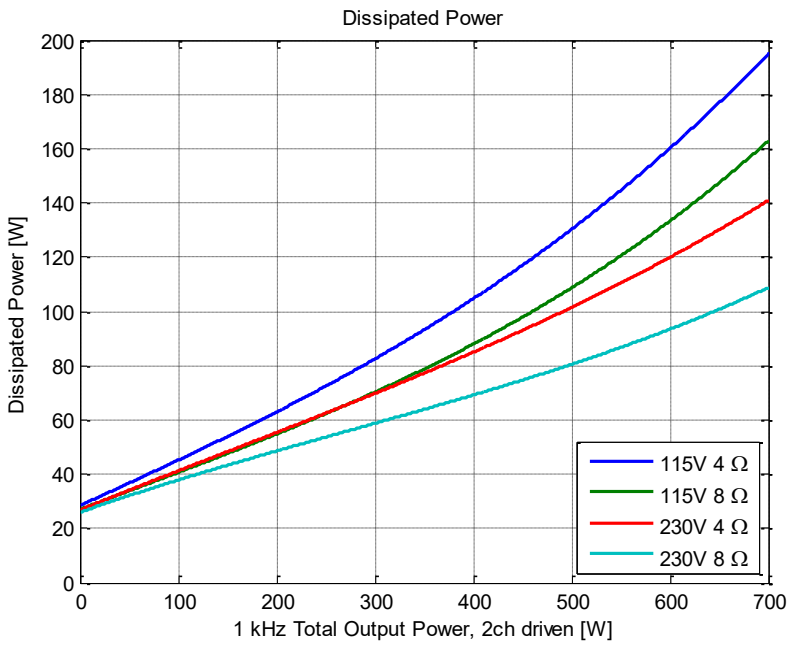

Figure 17: Dissipated power vs. output power

Input/Output Schematics and Features

The ICEpower700AS2 has a number of useful features described below.

Input Stages

The balanced input buffers have an anti-aliasing filter and a DC blocking capacitor. The input impedance of either signal input section is minimum 8 kΩ over the audio bandwidth, which is an acceptable loading condition for pre-amps, active crossover outputs etc.

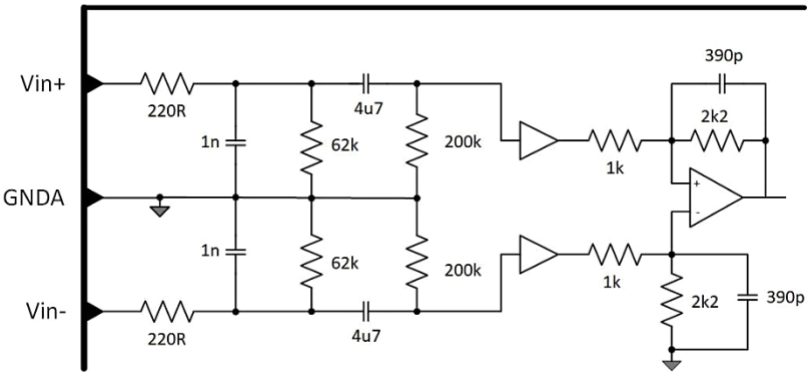

Figure 18: Balanced input buffer.

Output Stages

The output stages are full bridge topologies with a 2nd order filter. The essential output characteristics are:

- The switching residual on the output primarily consists of a single frequency component at the carrier fundamental f_s.
- The system bandwidth is 70 kHz in 4 Ω.

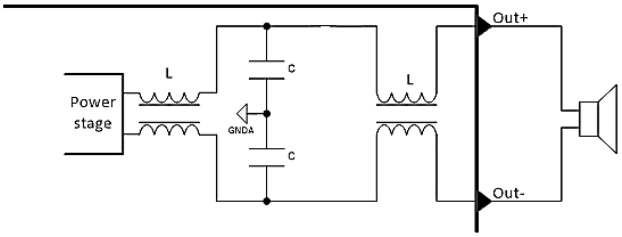

Figure 19: Output filter section

Over Current Monitor Pin

This pin is high (5 V) during normal operation, but it is pulled low (0 V) if a short circuit is detected on the speaker output terminals. This pin is output only.

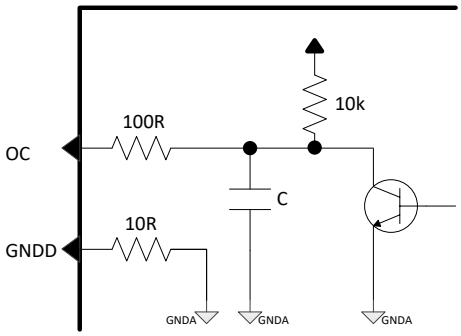

Figure 20: Over current monitor pin interface.

Thermal Shutdown Pin

This pin indicates if the amplifiers are shut down due to thermal overload. The pin is high (5 V) under normal conditions. If either amplifier temperature becomes too high, the amplifier shuts down and this pin is pulled low (0 V). This pin is only an output.

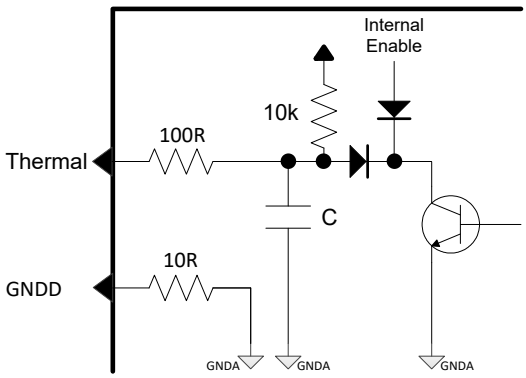

Figure 21: Thermal protection pin interface.

Temperature Monitor Pin

These two pins provide an analogue DC voltage representing the temperature sensed on each of the two amplifiers respectively. This pin is only an output.

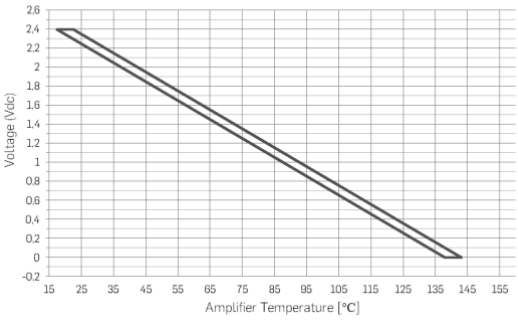

Figure 22: ICEpower700AS2 Temperature Monitor.

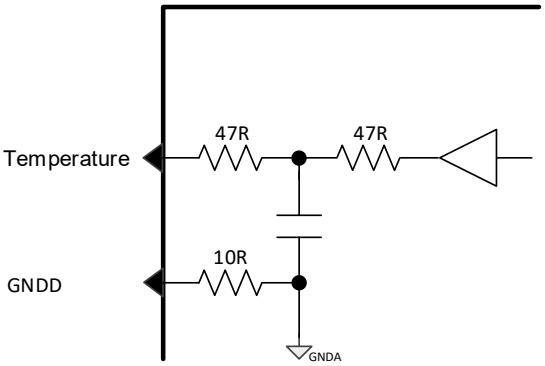

Figure 23: Temperature monitor pin interface.

Amplifier Enable

The Amplifier Enable pin can enable/disable the amplifiers. If the pin is left unconnected, the level is high (5 V), and the amplifiers are enabled. If the pin is pulled low (0 V) externally, the amplifiers will be disabled. The enable pin is pulled low by the internal protection circuitry if either of the amplifiers temperature becomes too high, or an amplifier overcurrent is detected. This pin is bidirectional.

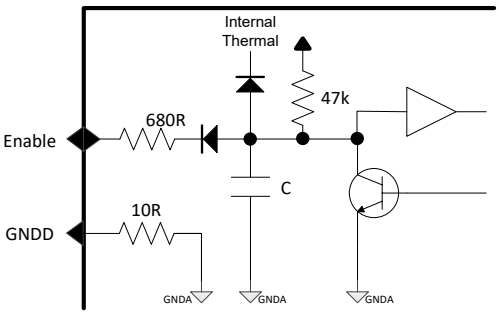

Figure 24: Amplifier enable pin interface.

Auxiliary Power Supply

The auxiliary supply can be used to power an external circuit such as a preamplifier or an equalizer/crossover. The maximum current draw from either +15 V or -15 V should never exceed 500mA including the consumption from any connected hanger(s).

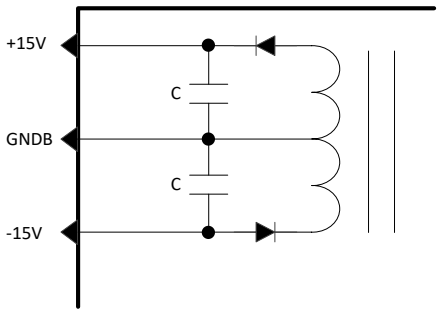

Figure 25: +/-15 V auxiliary supply

Hanger Vd

This high-power DC output is only intended for powering stand-alone ICEpower amplifier modules like the ICEpower300A1. Maximum output power including the onboard ICEpower700AS2 amplifier output power is 700 W.

Warning: The output is not short circuit protected. Continuous overload may permanently damage the power supply.

Trigger and Signal Sense

Three means are provided to put ICEpower700AS2 into Operational mode or Standby mode:

- 12 V trigger
- 3 V - 5 V trigger
- Signal Sense

The trigger levels are found in Table 20.

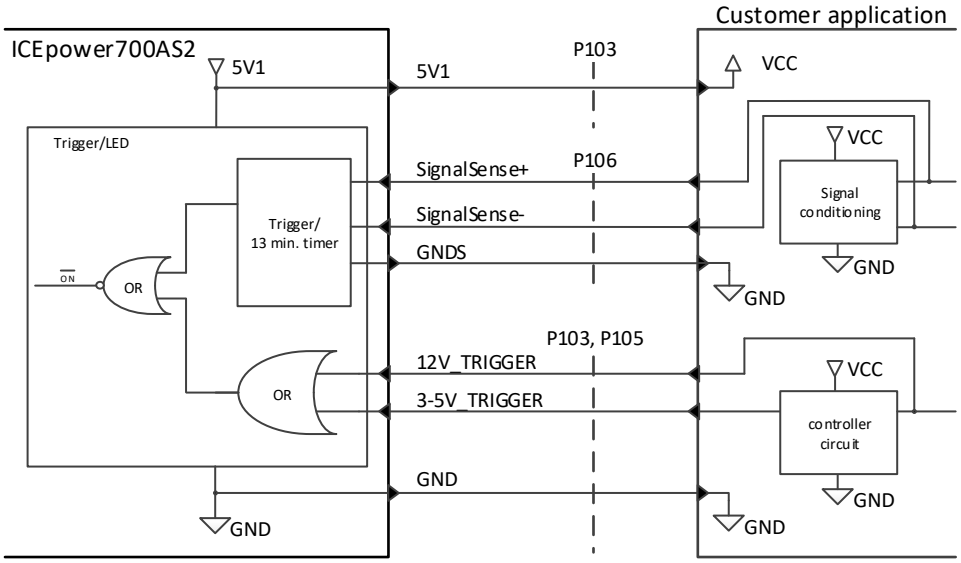

Figure 26: ICEpower700AS2 Trigger and Signal Sense connection scheme

The 12 V and 3 V - 5 V triggers are logic triggers. The 12 V trigger and the 3 V – 5 V trigger enable the designer to force operational mode by setting either one or both triggers high. Setting both logic triggers low will force standby mode (provided that no signal has been present at the Signal Sense terminals for at least 13 minutes).

Signal Sense

The Signal Sense function consists of an audio detection circuit and a timer. If an audio signal is present on the Signal Sense terminals, ICEpower700AS2 will enter operational mode. If audio is not present at the terminals, the timer will enter standby mode after approximately 13 minutes (provided that the logic triggers are set low).

LED Programming

ICEpower700AS2 features an onboard, programmable LED-driver for indication of operational- and standby-mode with eg. ON and STANDBY LED's, respectively. The LED's are implemented in the application circuitry as shown in Figure .

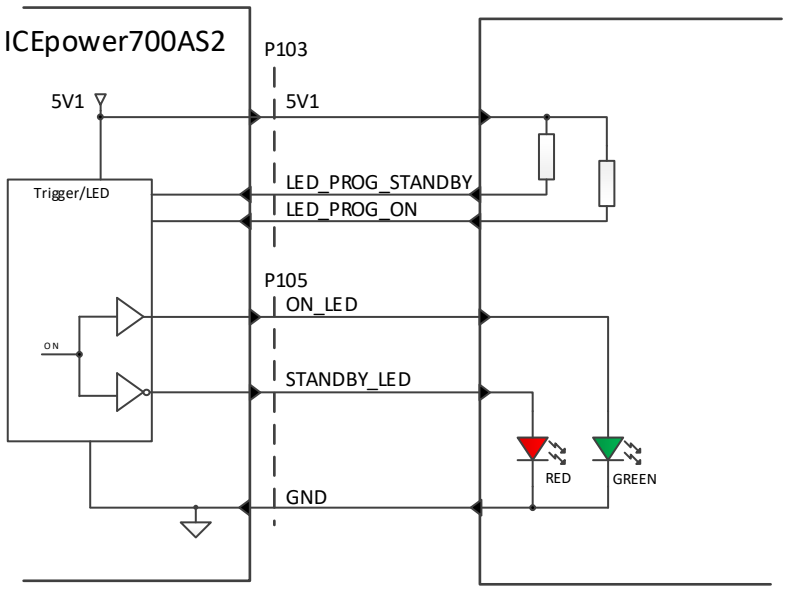

Figure 27: Application of the current programmable LED driver

The LED strength/current can be programmed individually by applying a resistor between the LED_prog-pin and 5V1. The resistor values are selected according to the graph below.

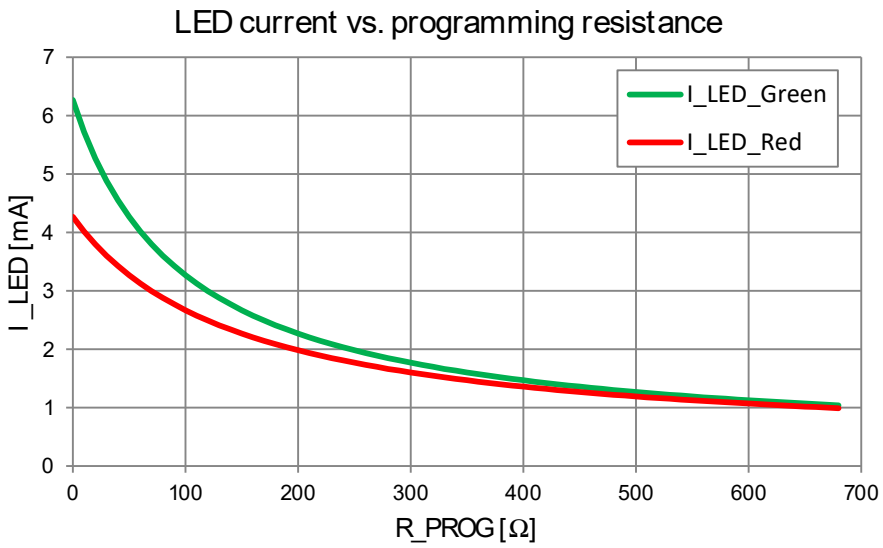

Figure 28: LED intensity/current programming

Operational Timing Diagrams

In the following sections, selected signals during power up/power down are illustrated.

Power up with logic triggers

From the timing diagram below, it is seen i.e. that the user will have 5V1 available 100ms after connecting 230 V mains and the user should wait at least 470 ms from trigger activation until current draw from 5V1 is increased above standby current level.

700AS2 Mains on and Trigger high timing Diagram

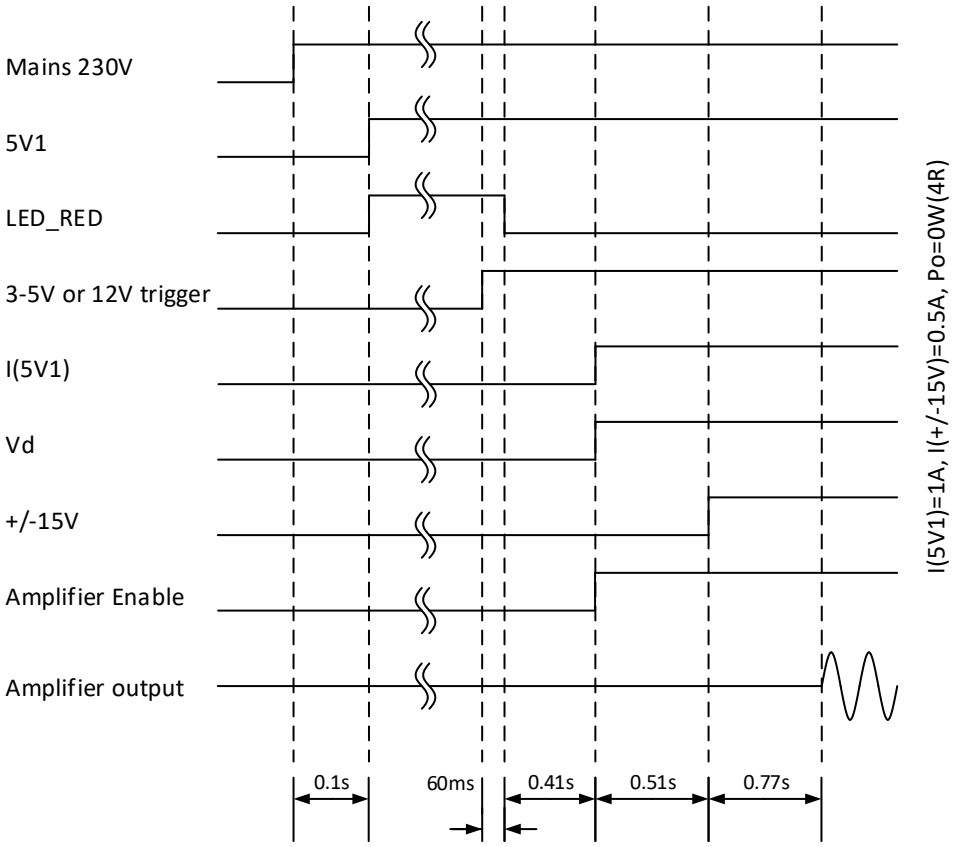

Figure 29: Power up from Mains on and trigger high, typical timing at 25 °C ambient.

Power down with logic triggers

From the timing diagram below, it is seen e.g. that the user should decrease current draw from 5V1 down to standby current level, no later than 60 ms from the point when the module is deactivated via trigger.

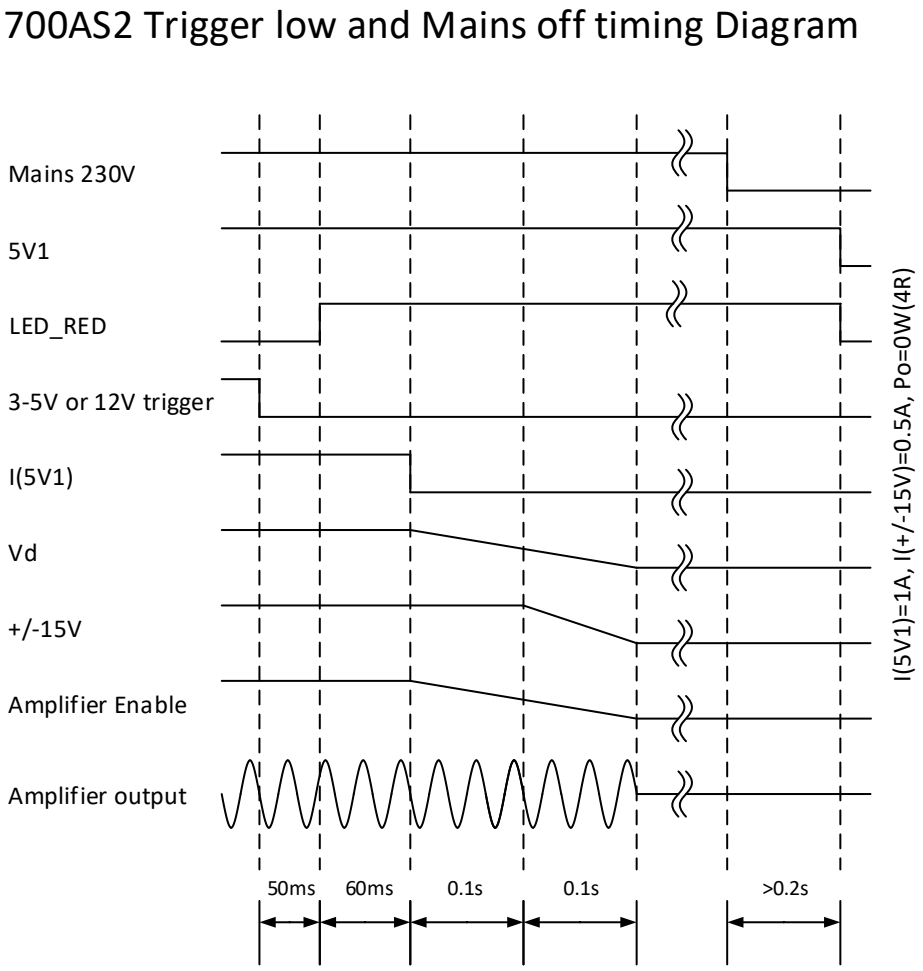

Figure 30: Power down from trigger low and Mains off, typical timing at 25 °C ambient.

Timing with Signal Sense

From the timing diagram below, it is seen e.g. that when the module is activated via Signal Sense, the user should wait at least 410 ms from LED_STANDBY goes low, and until current draw from 5V1 is increased above standby current level. When the module deactivates and LED_STANDBY goes high, the user has 4 s until current draw from 5V1 should be decreased down to standby current level.

700AS2 SignalSense On/Off timing Diagram

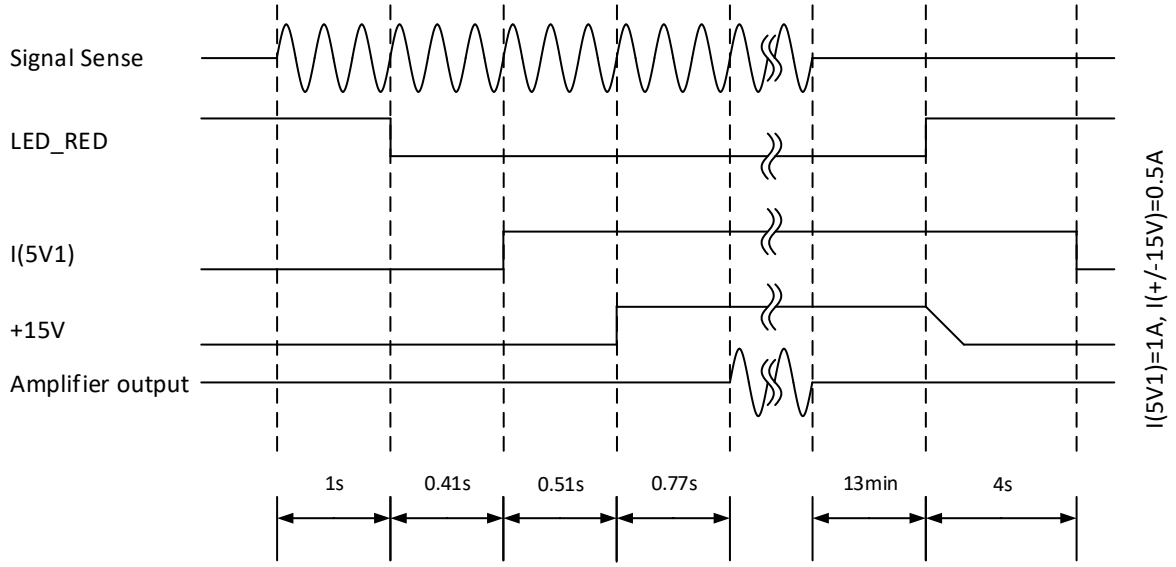

Figure 31: Power up/down on Signal Sense, typical timing at 25 °C ambient with 5mV, 100 Hz input signal.

Protection Features

Power Supply Protection

The power supply of the ICEpower700AS2 has two protection circuits: over temperature and over current.

The ±15 V auxiliary outputs are over current protected.

The temperature protection is activated if the absolute temperature of the module is too high. This can be caused by high ambient temperature, high load (amplifier and AUX supply) for a long time or a combination of these two parameters.

Mains Over Voltage Protection

In the unlikely event of over voltage, the ICEpower700AS2 will disable the main power supply until set in standby mode by triggers or Signal Sense.

Amplifier Protection

The amplifier section has a number of protection circuits.

These protection circuits handle over current protection, thermal protection and DC on output protection

The over current protection circuit is divided into two parts. Pulse-by-pulse protection and loop saturation protection. The pulse-by-pulse protection circuit limits the peak output current to 30A.

The loop saturation protection circuit detects saturation of the control loop. This condition will typically be allowed for 100 ms to 500 ms which is enough to avoid accidental shutdown at peak currents during music output. This protects the amplifier against excessive heating during short circuits.

The over temperature protection will only occur if the P_{RMS} is greater than the specified Continuous Output Power. In normal use, the amplifier will not shut down if properly mounted.
The over temperature protection works in two stages. When the temperature of an amplifier channel reaches around 110°C the power supply will start to lower the rail voltages to decrease the maximum output power and losses in the amplifier. When the temperature reaches around 140°C the amplifier will shut down for a short period of time.

Zobel/saturation protection is no longer needed because the amplifier cannot saturate, and it will run in over current limit until over temperature protection occurs.

The module is intended /designed for audio music reproduction. If outputting sine waves for laboratory testing, then be aware that sustained operation at high frequencies and high output voltage may cause damage to the output filter capacitors in high ambient temperature of 50°C. High frequency long term output voltage with which amplifier can run without damaging output filter capacitors in 50°C is shown in figure 32.

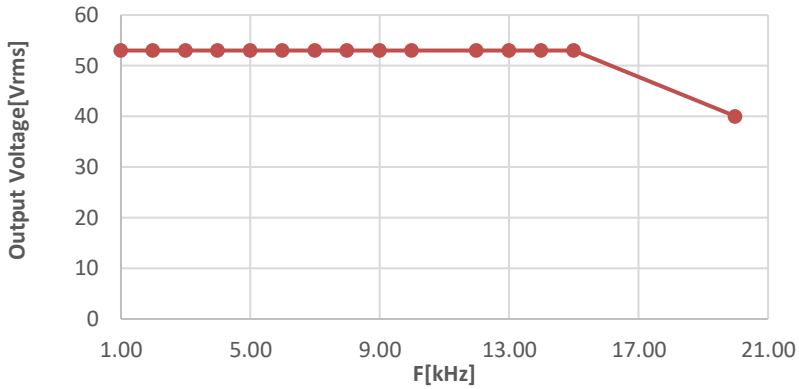

Figure 32: Maximum long term output voltage vs. frequency

Defects in the amplifier are rarely seen to generate DC on the output. However, a DC detection circuit is included on both channels to detect this failure type. If DC is detected on the amplifier output the main power supply is immediately switched off to protect the loudspeaker.
The power supply will automatically try to restart after a short period of time and if the DC error still exits it will immediately switch off again.

Standby Converter

Overload Protection

The 5V1 output is protected against overload conditions. In the event of an overload or short circuit, the converter will shut down and restart (hiccup).

Input under Voltage

For safe operation, the standby converter prevents the system from starting up in case of AC-Line input below rating.

Thermal Protection

The standby converter is thermally protected. In the unlikely event of a temperature rise, the standby converter will shut down before reaching unsafe operating conditions and resume operation once the temperature has dropped to a safe level.

Integration Guideline

This section describes considerations in relation to module integration.

Typical Setup – Wiring diagram

The standalone ICEpower700AS2 configuration features two audio channels. By adding one or two amplifier hanger modules (ICEpower300A1), ICEpower700AS2 can be configured with up to four channels.

Below are illustrates two typical configurations of the ICEpower700AS2 module: A three channel and a four-channel setup.

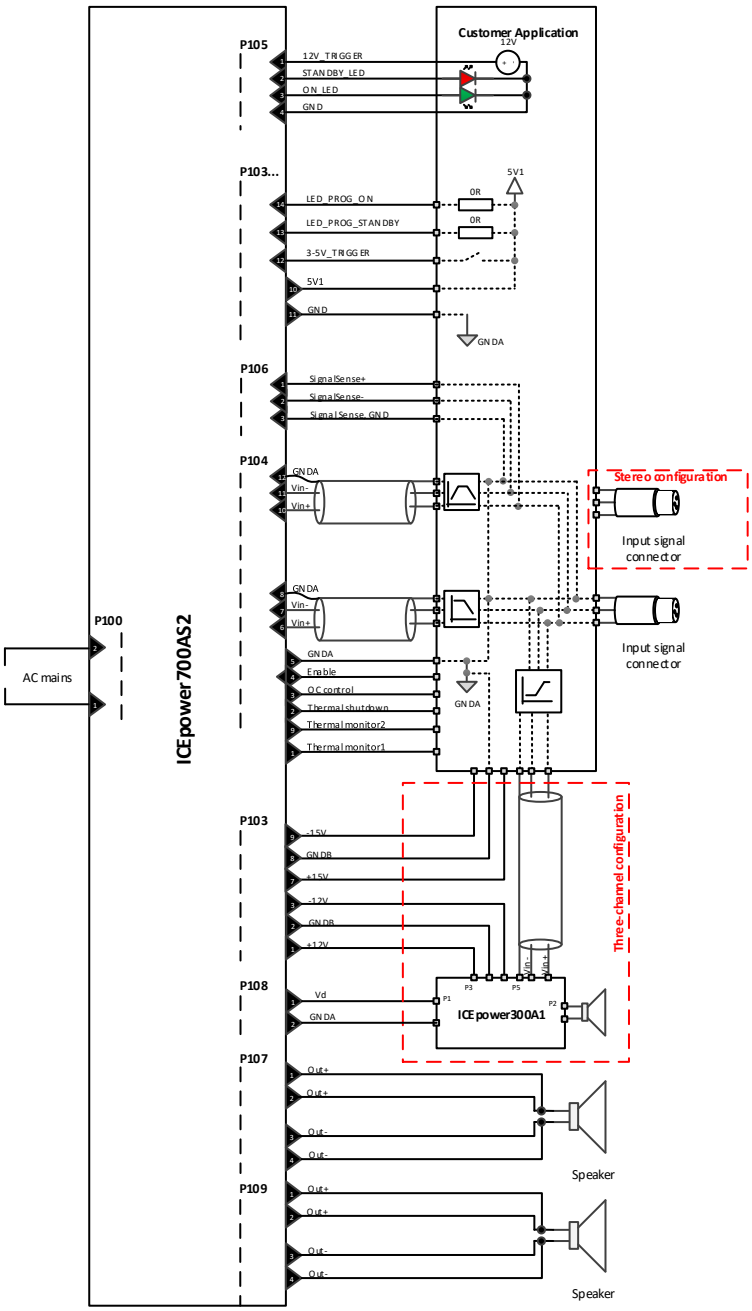

Figure 33: Two and three channel configuration, Balanced Ended audio input

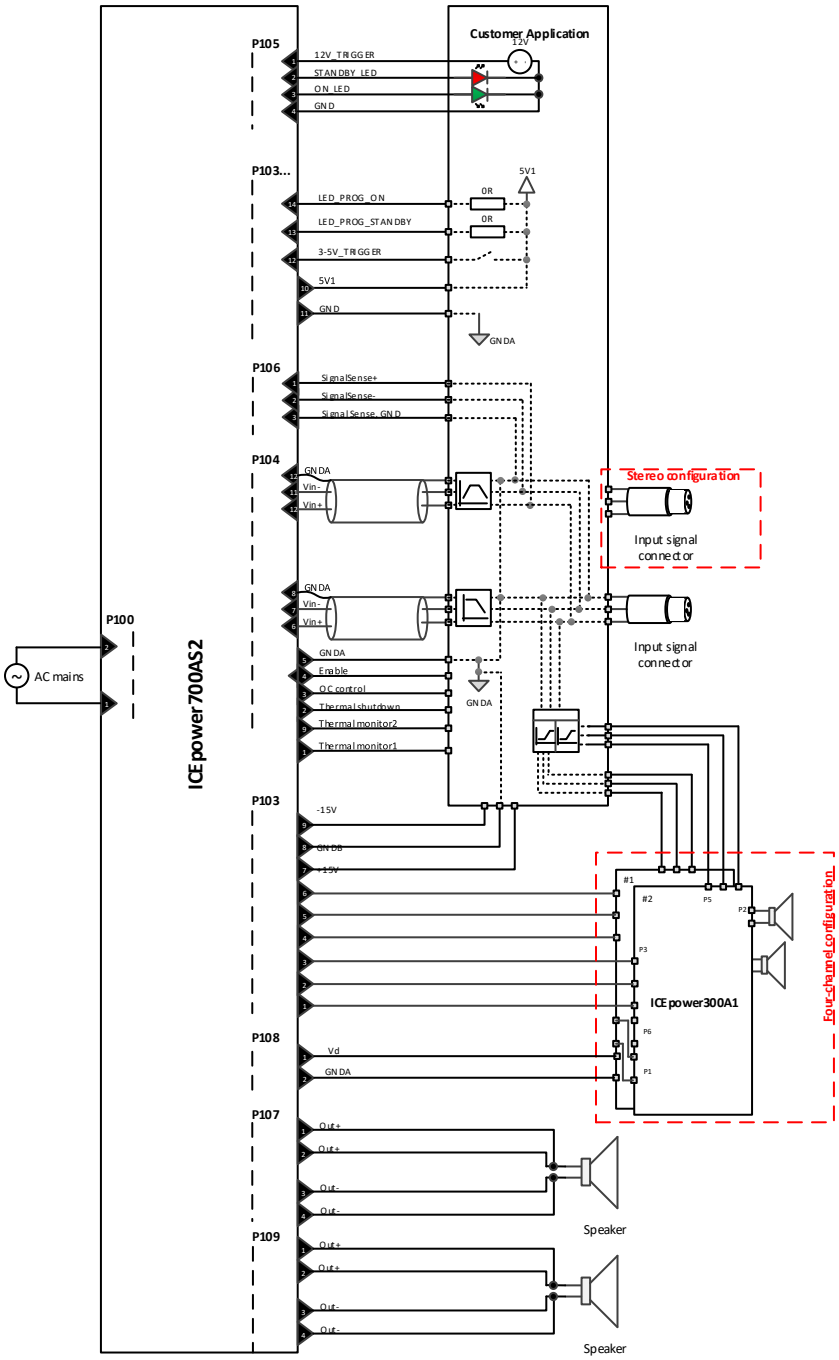

Figure 34: Four channel configuration, Balanced audio input

Grounding Scheme

In order to avoid ground loops, ICEpower700AS2 implements ground segregation.
These are named; <*Signal Sense GND*>, <*GND*>, <*GNDA*>, <*GNDB*> and <*GNDD*> and are illustrated in Figure .

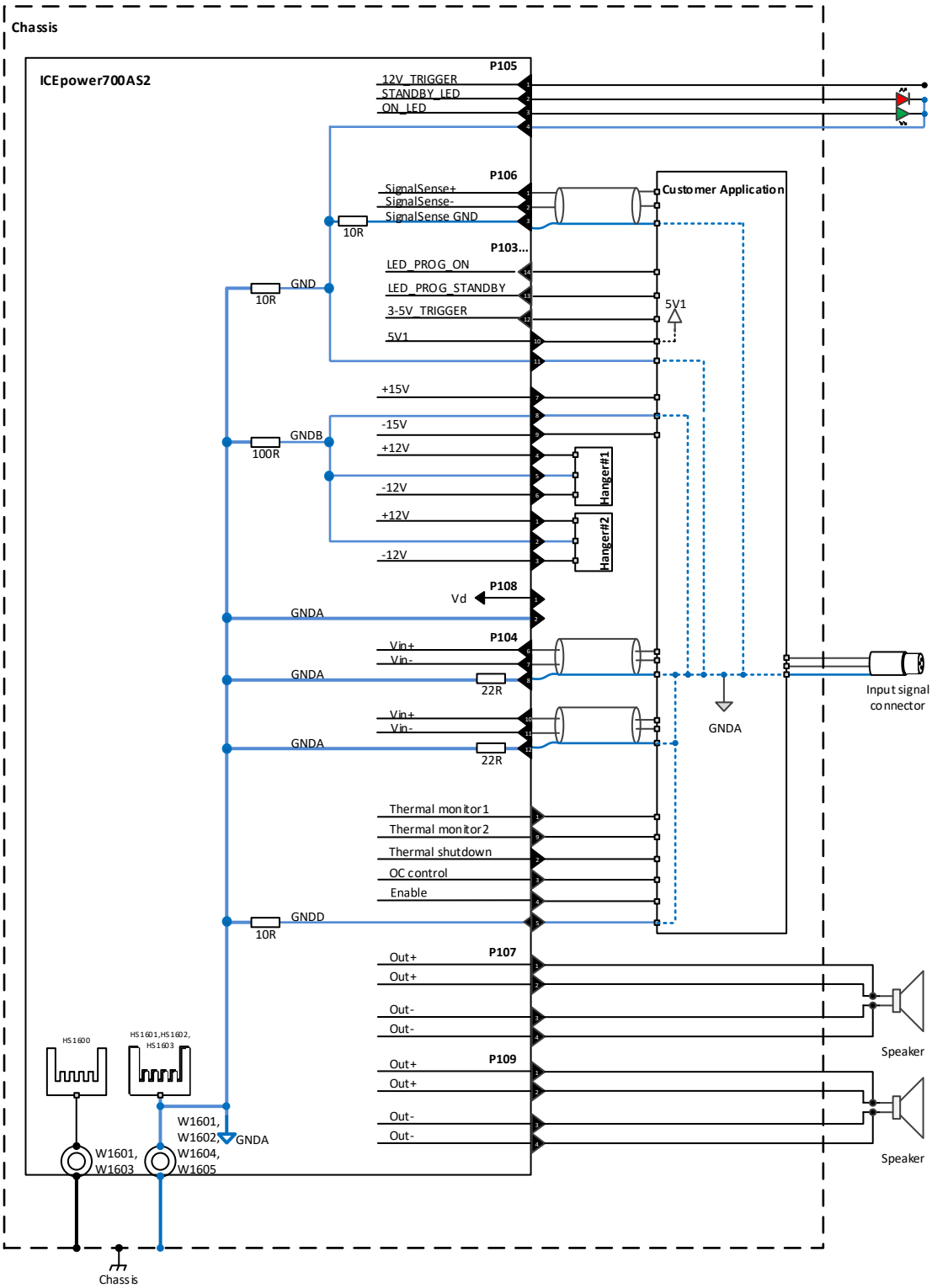

Figure 35: ICEpower700AS2 grounding scheme

To reduce the risk of hum, it is not recommended to connect GNDA directly to Chassis at the input signal connector.

EMC management

General

ICEpower amplifiers and power supplies utilize the latest switching technology to offer intelligent, compact and efficient audio power conversion systems. However, operating fast switching signals generates unwanted high frequency noise. Unless the necessary design precautions are taken this noise may exceed the standardized EMC limits. This section describes some guidelines to help reduce emission.
ICEpower700AS2 complies with the required EMC standards. This reduces the challenge of gaining the final product EMC approval.

EMC Recommendations

ICEpower has some basic recommendations, which should ease the EMC approval:

- When mounting via bottom side, the best EMC result is obtained when connecting all plated mounting holes to Chassis with low impedance spacers.
- When mounting via top side heat sinks, the best EMC result is obtained when also connecting W200 and W201 to chassis with low impedance spacers.
- Loops conducting RF currents emit noise. It is important that speaker cables are twisted, shielded or at least run closely paralleled to reduce the loop area as much as possible. Always route speaker cables as close as possible to Chassis, in order to minimize the resulting ground loop. The same applies to mains and internal power supply cables as well as signal cables. Do not bundle speaker wires from an amplifier channel together with speaker wires from other amplifier channels. Each amplifier channel should have its own speaker wire pair/ cable.

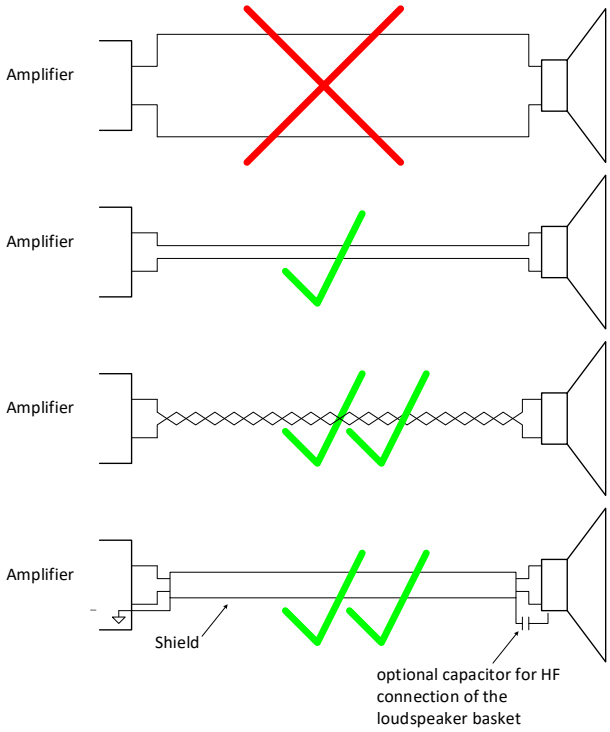

Note: When using shielded loudspeaker cable, the shield should not be connected directly to the basket of the loudspeaker. Loudspeakers may short the voice coil to the basket during heavy load resulting in damage to the module due to the short to ground. This can be avoided by making the connection to the basket through a capacitor.

- Do not route cables near the module magnetics.

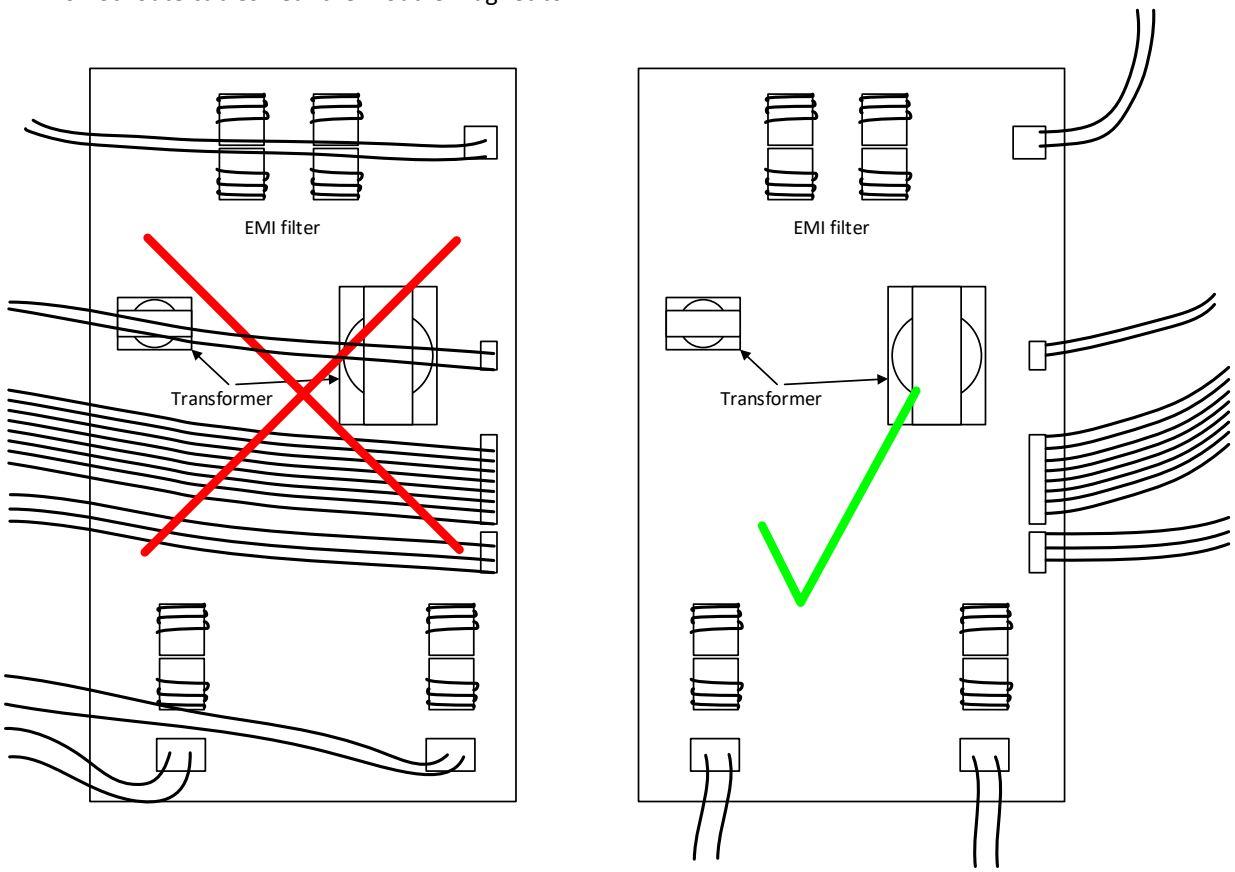

- Do not bundle input, output or mains cables.

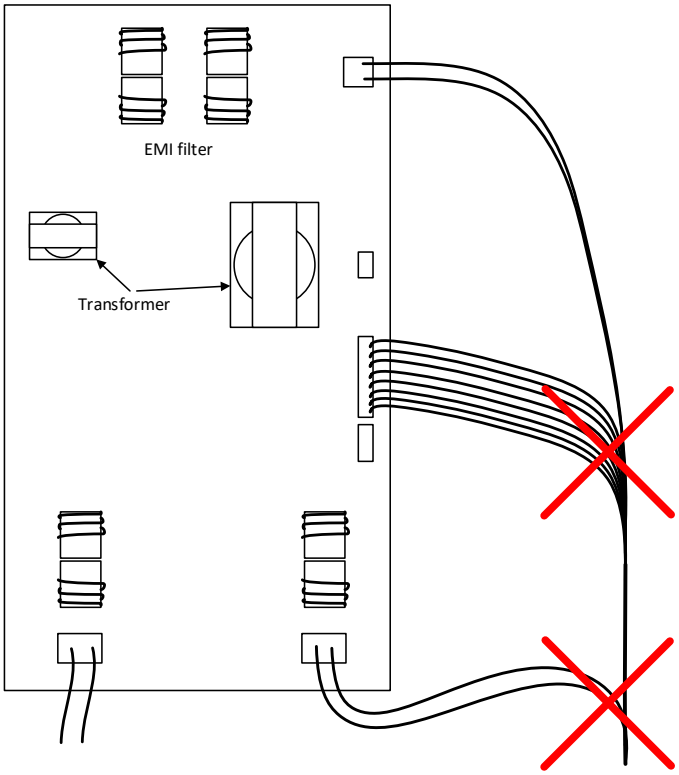

- If further reduction of emission is required, it is recommended to decouple all external wires to Chassis at the terminals, and GNDA on customer application board to Chassis.

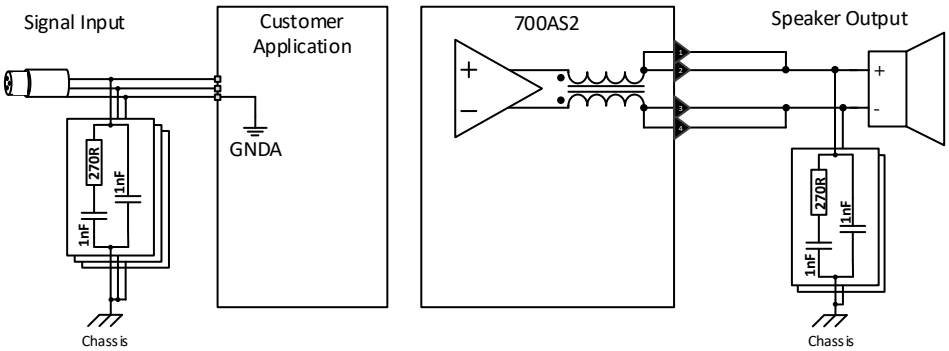

Figure 36: Illustration of decoupling of external wires for improved EMC performance

Thermal Design

ICEpower700AS2 implements high efficient ICEpower switching technology resulting in low losses.

ICEpower700AS2 is designed for high continuous power with no requirements for external heat sinking or fans.

However, if higher continuous power rating is required, external heat sinking can be connected directly to the onboard heat sinks. This eliminates the need for fans to the benefit of system robustness and cost.

Mechanical Mounting

The ICEpower700AS2 module is designed either for mounting on bottom side spacers or by the top side heat sinks.

Mounting on bottom side spacers

The module is mounted by means of 3.5 mm holes in the board. The holes are indicated on the illustration below.

12 mm spacers are recommended for mounting in order to ensure sufficient ventilation around the module and to ensure a proper safety clearance between module and chassis.

Drill Pattern

All dimensions are in [mm].

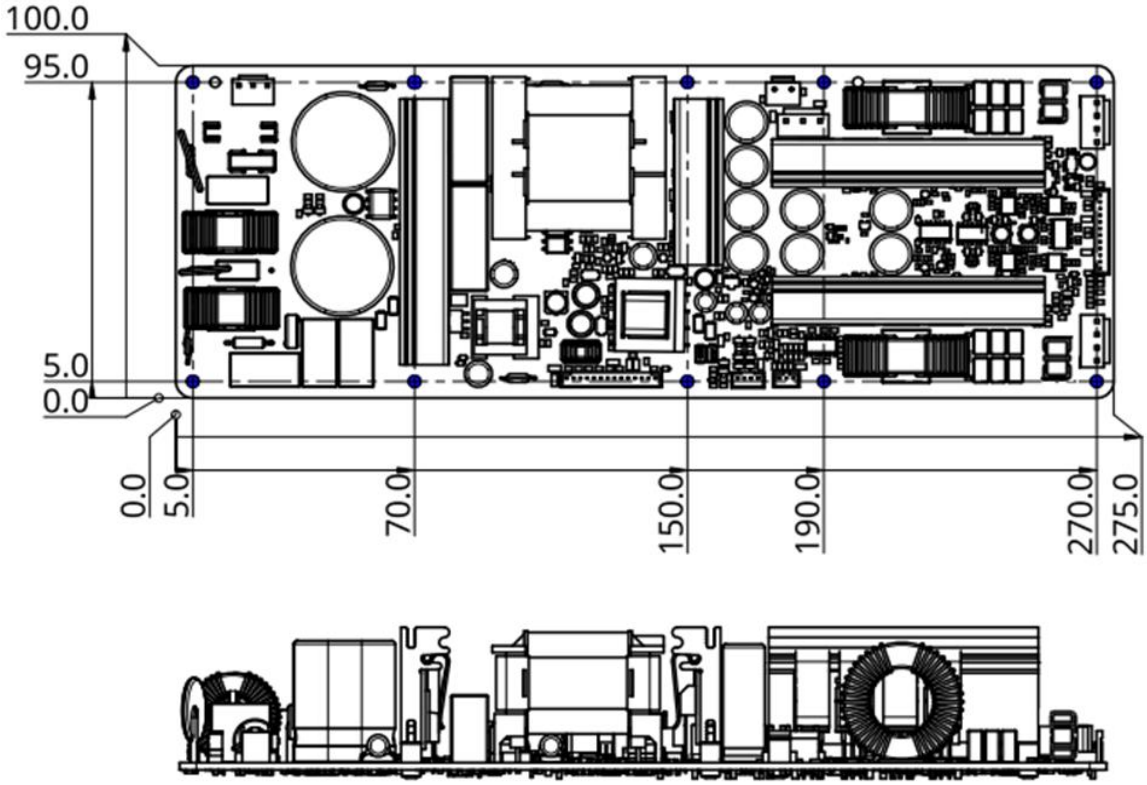

Figure 37: Mounting by bottom side spacers

Mounting by top side Heat Sinks

The ICEpower700AS2 is designed for flexible mounting and if needed, easy mechanical interface to external heat sinking for even higher continuous power capability.

The module should not be mounted solely by the heat sinks. Use 40 mm spacers for support in the positions marked blue in Figure 38. Electrically conductive spacers must be used to comply with the EMC regulations.

On the bottom side of the PCB, 12 mm of space from PCB surface to Chassis is recommended for mounting in order to ensure sufficient ventilation around the module and to ensure a proper safety clearance between module and chassis.

Drill Pattern

All dimensions are in [mm].

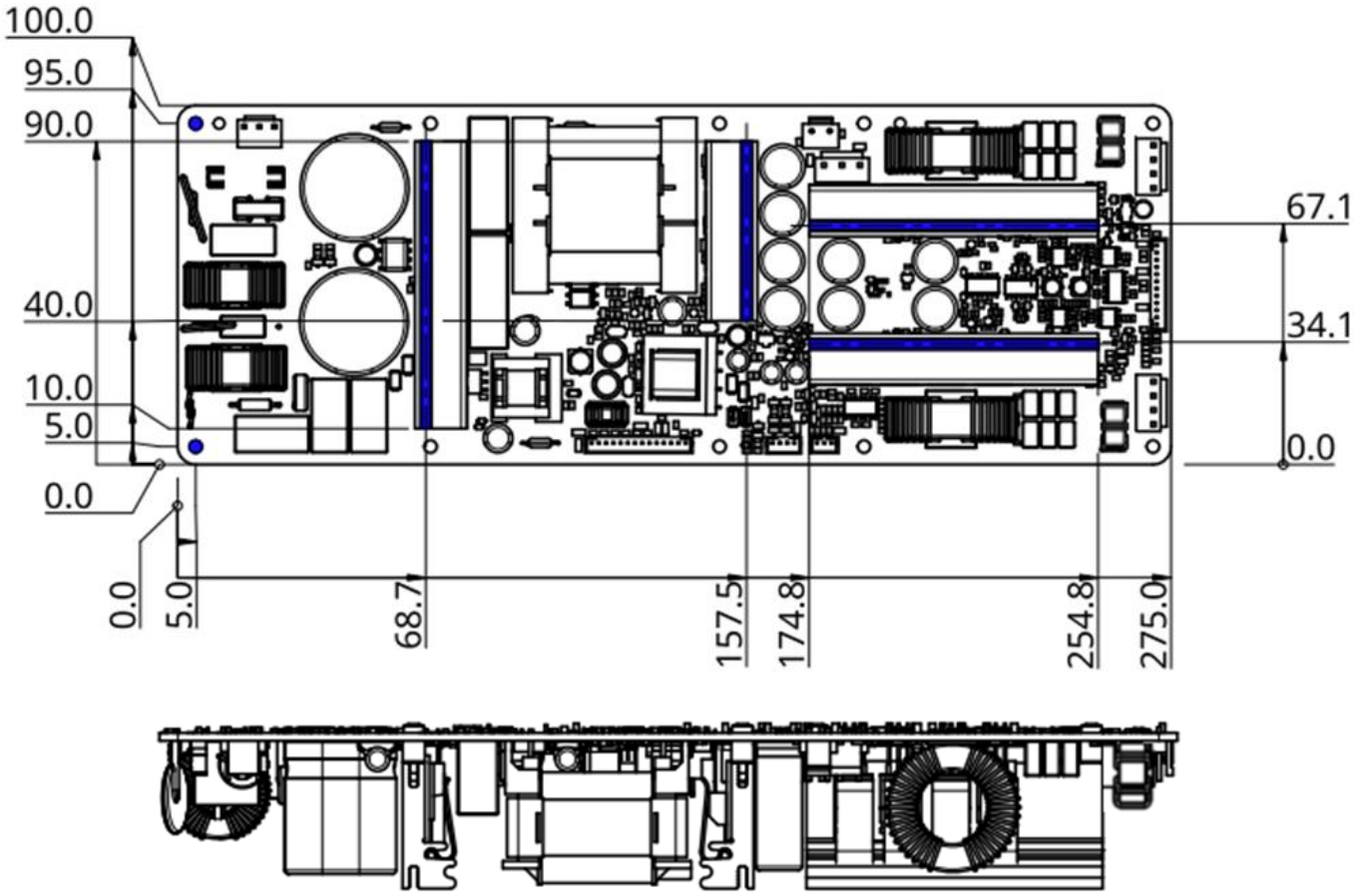

Figure 38: Mounting by top side Heat Sinks

The mounting slots in the top of the onboard heat sinks are designed for use with M3 DIN 7500 C thread forming screws. Thread forming screws (e.g. Bossard BN5653 M3) must be used in order to avoid burrs, which could cause unintentional short circuits.

The heat sink slot is approximately 5 mm deep. It is recommended to leave 1 mm slack for mechanical tolerances. I.e. to mount the module on a 2 mm plate, a (5-1+2) mm = 6 mm screw is recommended.

A minimum of two screws in the 50 mm heat sink and three screws in the 80 mm heat sinks are recommended.

When mounted by top side heat sinks, isolation foil (e.g. polycarbonate - Lexan®) must be added to isolate the primary bulk capacitors (C203, C204) from chassis.

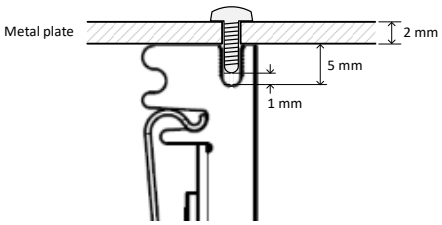

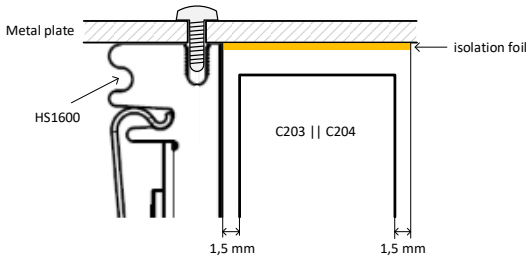

Standards

The ICEpower700AS2 standalone module has been designed and tested to conform to applicable standards below. Final certification and compliance of the end product incorporating this module, is required by the end manufacturer.

Safety

IEC 62368-1		
Requirement	**Basic Standard**	**Verdict**
IEC 62368-1 (2nd Edition), IEC 62368-1 (3rd Edition)	Audio/video, information and communication technology equipment - Part 1: Safety requirements	PASS
UL 62368-1 (3rd Edition) CSA C22.2 No. 62368-1	AZOT2, AZOT8 (Audio/video, Information and Communication Technology Equipment)	UL Listed E496941

EMC

CISPR 32		
Requirement	**Basic Standard**	**Verdict**
CISPR 16-2-1 (Class B)	Conducted Emissions (AC Power)	PASS
CISPR 16-2-3 (Class B)	Radiated Emissions below 1 GHz	PASS
CISPR 16-2-3 (Class B)	Radiated Emissions above 1 GHz	PASS
IEC 61000-3-2	Measurement of AC Mains harmonic currents	PASS
IEC 61000-3-3	Measurement of AC Mains voltage variations and flicker	PASS
CISPR 35		
IEC 61000-4-2	Electrostatic discharge	PASS
IEC 61000-4-3	Radiated radio-frequency, electromagnetic field	PASS
IEC 61000-4-4	Electrical fast transient/burst	PASS
47 CFR, Part 15, Subpart B (FCC Part 15B)		
ANSI C63.4 (Class B)	AC power-line conducted emission measurements	PASS
ANSI C63.4 (Class B)	Radiated emission measurements 30 – 1000 MHz	PASS

ESD Warning

ICEpower products are manufactured according to the following ESD precautions:

- ANSI/ESD-S20.20-2007: Protection of Electrical and Electronic Parts, Assemblies and Equipment.

Further handling of the products should comply with the same standard.

The general warranty policy of ICEpower a/s does not cover ESD damaged products due to improper handling.

Packaging and Storing

ESD safe cardboard is used for wrapping:

Order Codes	Description	Part Number
ICEpower700AS2	2 channels 700W ICEpower amplifier with integrated ICEpower supply, standby converter & universal mains operation.	8008140

Dimensions and weight:

Package	**Quantity**	**Dimensions (w × d × h) [mm]**	**Gross Weight [kg]**
Carton	14	400 × 590 × 250	16.2
Pallet	280	800 × 1200 × 1400	348

Storage Humidity and Temperature

Please refer to section Environmental Specifications page 12.

Stacking

Pallets may **not** be stacked on top of each other.

Contact

For additional information about the ICEpower® technology from ICEpower a/s, visit our web site or contact us.

ICEpower a/s
Vandtårnsvej 62A 3B
DK-2860 Søborg

Phone +45 31710001

ICEpoweraudio.com
info@icepower.dk

Legal Notes

ICEpower a/s believes that the information in this datasheet is accurate and reliable. However it is provided "as is" without any warranties of any kind. ICEpower a/s and its suppliers, to the fullest extent permitted by law, disclaim all warranties, including the warranty of merchantability, warranty of non-infringement of third-party rights, and the warranty of fitness for a particular purpose. ICEpower a/s and its suppliers make no warranties about the accuracy, reliability, completeness, or timeliness of the material, services, software, text, graphics and links. In no event will ICEpower a/s be liable to any party for any damages whether direct, indirect, special, consequential or other for any use or inability to use of this datasheet, including, without limitation, any damages for lost profits, business interruption, loss of programs or other data on your information handling system or otherwise, even if we are expressly advised of the possibility of such damages.

Information in this datasheet may contain technical inaccuracies or typographical errors. The information in the datasheet may be changed at any time without prior notice or obligation.

ICEpower® is a trademark of ICEpower a/s.

ICEpower a/s products are not authorized for use as critical components in life support devices or life support systems without the express written approval of the president and general counsel of ICEpower a/s. As used herein:

- Life support devices or systems are devices or systems which, (a) are intended for surgical implant into the body, or (b) support or sustain life, and whose failure to perform when properly used in accordance with instructions for use provided in the labelling, can be reasonably expected to result in a significant injury to the user.

- A critical component is any component of a life support device or system whose failure to perform can be reasonably expected to cause the failure of the life support device or system, or to affect its safety or effectiveness.

ICEpower a/s ©2016